Bellows suction cups SI-HD (round)

FSG 9 SI-HD-65 G1/8-IG

Część nr..:10.01.06.04159

https://www.schmalz.com/10.01.06.04159

Bellows suction cup (round) for very uneven workpieces



- Size: 9
- Suction cup material: Silicone SI-HD
- Material hardness [Shore A]: 65 Shore A
- Material characteristics: FDA-compatible
- Nipple material: Aluminum
- Connection: G1/8"-F
- Number of folds: 2,5
- Vacuum connection: G1/8"-F

Dane projektowe

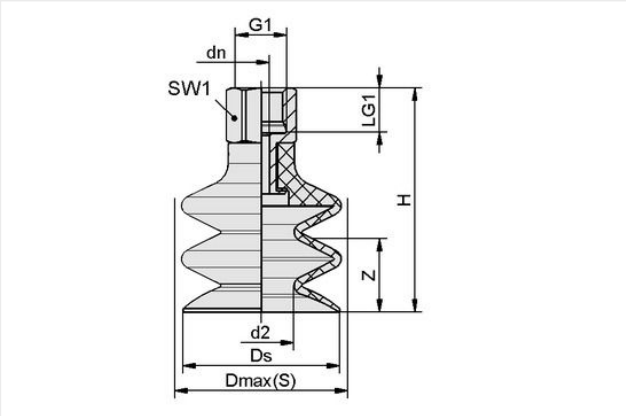

Atrybut	Wartość
d2	4,10 mm
dn	3,50 mm
Dmax(S)	9,50 mm
Ds	9 mm
G1	G1/8"-F
H	27 mm
LG1	8,50 mm
SW1	14 mm
Z (Stroke)	3 mm

Note: Acceptable dimensional tolerances for elastomer parts concerning to DIN ISO 3302-1 M3

Dane techniczne

Atrybut	Wartość
Suction cup material	Silicone SI-HD
Material hardness [Shore A]	65 Shore A
Size	9
Number of folds	2,50
Connection	G1/8-IG
Curve radius (min) (convex)	10 mm
Volume	0,15 cm³

Kontakt z firmą Schmalz
Schmalz Sp.z.o.o. | ul. Fabianowska 131/A1, 62-052 Komorniki, Poland | +48 61 628 67 70 | schmalz@schmalz.pl

Bellows suction cups SI-HD (round)

FSG 9 SI-HD-65 G1/8-IG

Część nr..:10.01.06.04159

https://www.schmalz.com/10.01.06.04159

Suction force (-600mbar)	0,79 N
Pull-off force	2,30 N
Hose diameter (empf.) d	4 mm
Weight	4,90 g
Product family	FSG

Note: Suction force: The specified suction forces are theoretical values at a vacuum of -0.6 bar and with a dry, smooth and flat workpiece surface - they do not include a safety factor Pull-off force: The pull-off force of the versions made of natural rubber is reduced by about 40% Hose diameter: The recommended hose diameter refers to a hose length of approx. 2 m

Części zamienne



SA-NIP N016 G1/8-IG DN350

Część nr..:10.01.06.05731

Nipple family: N 016
Thread G1: G1/8"-F
Length L1: 18,5 mm
Fitting length: 12 mm
Nominal diameter dn: 3,5 mm
Material: Aluminum



FG 9 SI-HD-65 N016

Część nr..:10.01.06.03148

Size: 9
Suction cup material: Silicone SI-HD
Material hardness [Shore A]: 65 Shore A
Material characteristics: FDA-compatible
Number of folds: 2,5