Main Features

- Control circuit and RGB chip are integrated in a package of **3535** components, to form a complete addressable pixel.
- It is equipped with an internal signal shaping circuit. After any pixel receives the signal, it undergoes waveform shaping before being output, ensuring that the waveform distortion of the line does not accumulate.
- OUT R / G / B output gray level: R,G,B 65536 gray scale
- RGB Port with 2KHz refresh frequency
- Serial cascade port, capable of receiving and decoding data through a single signal line;
- **Single-wire Self-By pass function.**An additional signal line is added to achieve dual-channel signal transmission. Even if a single pixel is damaged, it will not affect the overall display effect.
- When the transmission distance between any two points does not exceed 2 meters, no additional circuits are required.
- When the refresh rate is 30 frames per second, the number of cascades is no less than 512 points.
- The data transmission speed can reach up to 800Kbps.
- It has the function of current gain.
- The color of the light is highly consistent and the cost performance is high.
- The internal IC has no reverse connection protection function.
-

Main Applications

- LED transparent screen, LED pixel screen, LED special-shaped screen, various electronic products.

General description

WS2916A-MINI is an intelligent external control LED light source that integrates a control circuit and a light-emitting circuit. Its appearance is the same as that of a **3535**LED light bead, and each component is a pixel. The pixel point contains an intelligent digital interface, data latch, signal shaping and amplification drive circuit, a high-precision internal oscillator and a high-precision constant current control module, effectively ensuring the high consistency of the color of the pixel point light**.**

Single-wire Self-By pass function. An additional signal line is added to achieve dual-channel signal transmission. Even if a single pixel is damaged, it will not affect the overall display effect.

The data transfer protocol use Single-wire RZ protocol.

After the pixel is powered on and reset, the DIN end accepts the data transmitted from the controller. The first 48-bit data sent over is extracted by the first pixel and then sent to the data latch inside the pixel. The

remaining data, after being shaped and amplified by the internal shaping processing circuit, starts to be forwarded and output to the next cascaded pixel point through the DO port. With each pixel point of transmission, the signal is reduced by 48 bits. The pixel points adopt automatic shaping and forwarding technology, which makes the number of cascaded pixel points not limited by signal transmission, but only restricted by the signal transmission speed requirement.

Refresh Frequency is **2KHz**, No flicker occurs even when captured by HD camera,suitable for high speed products.

RESET time**>280μs**, it won't cause wrong reset while interruption, it supports the lower frequency and chip MCU.

Mechanical Dimensions（Unit:mm）

Tolerance: ± 0.15mm

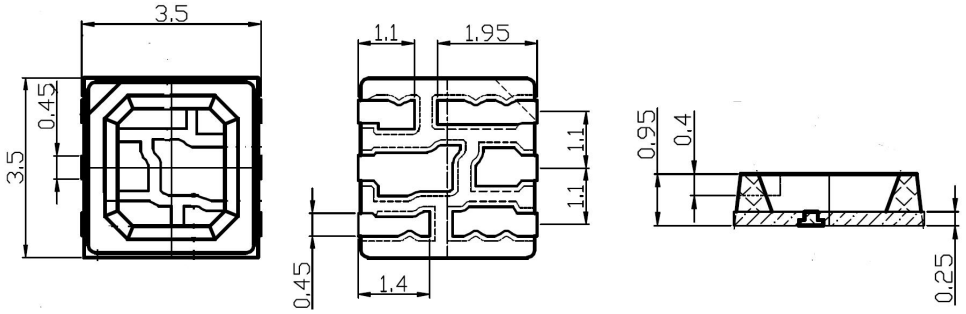

Top View　　Back View　　Side View

PIN Configuration

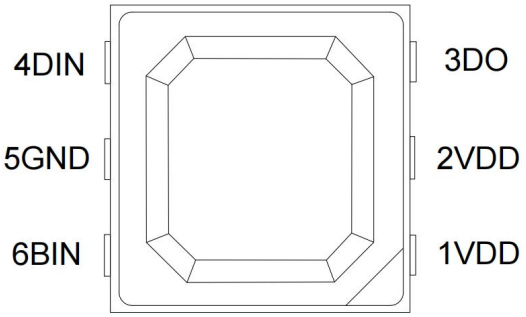

PIN Function

NO.	Symbol	PIN	Function description
1	VDD	POWER SUPPLY	Power supply PIN
2	VDD	POWER SUPPLY	Power supply PIN
3	DO	DATA OUT	Control data signal output
4	DIN	DATA IN	Control data signal input PIN
5	GND	GROUND	Ground, data & power grounding
6	BIN	Bypass signal input	Bypass signal input

Absolute Maximum Ratings（T_A=25℃,V_{SS}=0V）

Parameter	Symbol	Ratings	Unit
Power supply voltage	V_{DD}	+3.7~+5.3	V
Logical Input Voltage	V_I	**-0.3V～VDD+0.7**	V
Operation junction temperature	Topt	-25～+65	℃
Storage temperature	Tstg	-40~+85	℃

Electrical Characteristics（T_A=25℃， V_{DD}=5V,V_{SS}=0V）

Parameter	Symbol	Min	Tpy	Max	Unit	Conditions
Quiescent current	I_{VDD}	——	0.6	——	mA	DC=5V
Port output current	Iout	——	16	——	mA	OUTR+OUTG+OUTB
Input Current	I_I	——	——	±1	μA	V_I=V_{DD}/V_{SS}
High-level input voltage	V_{IH}	0.55V_{DD}	——	——	V	D_{IN}，SET
Low-level input voltage	V_{IL}	- 0.3	——	0.3 V_{DD}	V	D_{IN}，SET

Switching Characteristics（T_A=25℃, V_{DD}=5V, V_{SS}=0V, unless otherwise specified）

Parameter	Symbol	Min.	Typ.	Max.	Unit	Test Condition (Working current)
Transmission delay time	t_{PLZ}	——	——	300	ns	CL=15pF, DIN→DOUT, RL=10KΩ
Fall time	t_{THZ}	——	——	120	μs	CL=300pF, OUTR/OUTG/OUTB
Input capacity	C_I	——	——	15	pF	——

LED Characteristics

Parameter	Symbol	Color	Min.	Typ.	Max.	Unit	Working current
Luminous intensity	IV	Red	400	500	800	mcd	16mA
		Green	1500	2200	2600		
		Blue	300	380	500		
Wavelength	λd	Red	620	622	625	nm	16mA
		Green	525	527	530		
		Blue	465	467	470		

Data Transfer Time

T0H	0 code, high voltage time	200ns~380ns
T1H	1 code, high voltage time	540ns~1μs
T0L	0 code, low voltage time	750ns~1.2μs
T1L	1 code, low voltage time	460ns~1μs
RES	Frame unit, low voltage time	>280μs
Data Cycle：T0H+TOL≥1.25μs; T1H+T1L≥1.25μs		

Timing waveform diagram

Sequence Chart

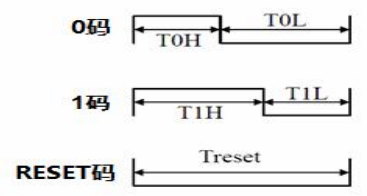

Cascade Method：

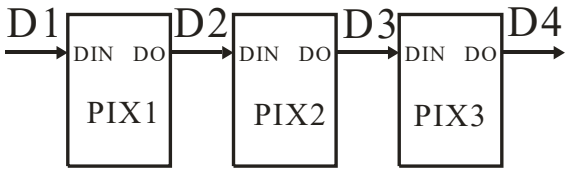

Data Transmission Method

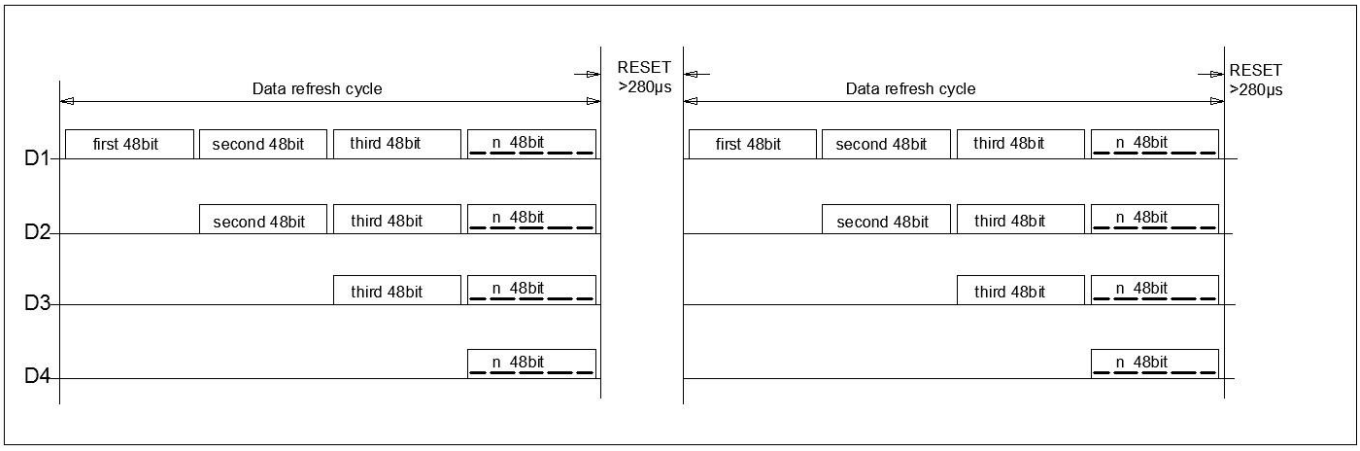

Note: The data of D1 is send by MCU, and D2, D3, D4 through pixel internal reshaping amplification to transmit.

48 bit Data structure

- 16-bit current gain data structure, high-bit first transmission, sent in GRB sequence

IG4	IG3	IG2	IG1	IG0	IR4	IR3	IR2	IR1	IR0	IB4	IB3	IB2	IB1	IB0	校验码

Note: The check code can be either 0 or 1

- 48-bit RGB grayscale data structure, high-bit first transmission, sent in GRB sequence

Composition of 48bit Data

G15	G14	G13	G12	G11	G10	G9	G8	G7	G6	G5	G4	G3	G2	G1	G0	…Continued…
…Continued…	R15	R14	R13	R12	R11	R10	R9	R8	R7	R6	R5	R4	R3	R2	R1	R0	…Continued…
…Continued…	B15	B14	B13	B12	B11	B10	B9	B8	B7	B6	B5	B4	B3	B2	B1	B0

Current gain

Current gain setting	RGB Current（mA）
0	0
1	0.53
2	1.06
3	1.60
4	2.13
5	2.66
6	3.19
7	3.73
8	4.26
9	4.79
A	5.32
B	5.85
C	6.39
D	6.92
E	7.45
F	7.98
10	8.52
11	9.05
12	9.58
13	10.11
14	10.65
15	11.18
16	11.71
17	12.24
18	12.77
19	13.31
1A	13.84
1B	14.37
1C	14.90
1D	15.44
1E	15.97
1F	16.50

Typical Application Circuit:

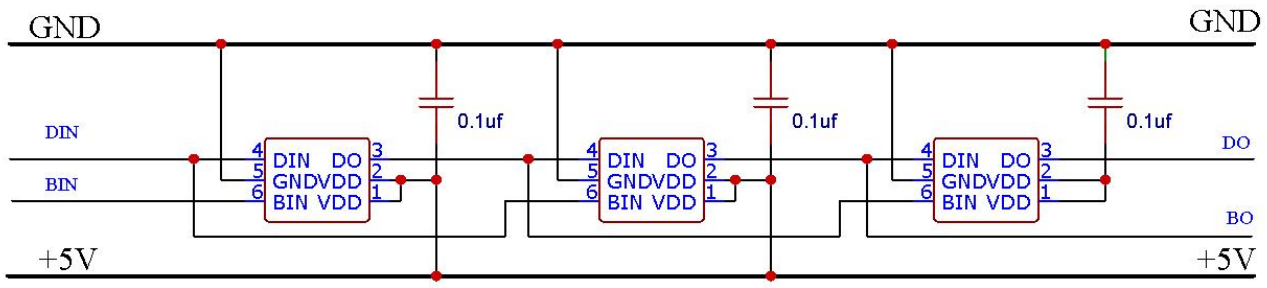

Among them, Cn is the filter capacitor at the VCC pin of the lamp bead, and its general value is 100nF.

Remark:

1.DI is the main input signal and BI is the auxiliary input signal. Under normal circumstances, the LED extracts signals from the DI. When one of the middle leds is damaged, the latter LED extracts the signal from the BI without affecting the signal transmission of the subsequent leds.

2.For finished product application, the BI pin of the first LED should not be left floating. It is recommended to connect it to GND.

WORLDSEMI TOP SMD LED Using Instructions

1. **Summary**

To make the best use of WORLDSEMI's LED, please refer to the below precautions, they are of same usage method as other electronic components.

2. Cautions

2.1. Dust & Cleaning

The surface of the LED is encapsulated with modified epoxy resin because it plays a very good role in protecting the optical performance and aging resistance. The modified epoxy resin is easy to stick with dust and must be kept clean. When there's a certain amount of dust on the surface of the LED, it won't affect brightness, but dust proof should be taken care of. Promoting the use of unsealed package in preference to others and the assembled LEDs should be placed in a clean container.

Avoid using the organic solvents to clean the dust on the LED surface and it's necessary to confirm whether the cleaning fluid will dissolve the LED.

Do not clean the LEDs by the ultrasonic. Some parameters affecting the LED performance must be evaluated if have no alternative but to the ultrasonic cleaning method, such as ultrasonic power, baking time and assembly conditions, etc.

2.2. Moisture-proof packaging

TOP SMD LEDs are moisture sensitive components. LEDs are packaged in aluminum foil bag to prevent the from absorbing moisture during transport and storage. A desiccant is placed in the bags to absorb moisture. If the LED absorbs moisture, then it evaporates and expands when in reflow process, which may break the colloid from the bracket and damage the optical performance of LED. For this reason, moisture-proof packaging is to prevent the from absorbing moisture during transport and storage. The moisture resistance rating of WORLDSEMI's LED is: **LEVEL 5a**.

Tabel I - IPC/JEDEC J-STD-020 Moisture/Reflow Sensitivity Classification

MSL Level	Workshop Life	
	Time	Conditions
LEVEL1	Unlimited	≤30℃/85%RH
LEVEL2	1 Year	≤30℃/60%RH
LEVEL2a	4 Weeks	≤30℃/60%RH

LEVEL3	168 Hours	≤30℃/60%RH
LEVEL4	72 Hours	≤30℃160%RH
LEVEL5	48 Hours	≤30℃/60%RH
LEVEL5a	**24 Hours**	**≤30℃/60%RH**
LEVEL6	Take-out and Use immediately	≤30℃/60%RH

2.3 SMT Instruction:

2.3.1 It is recommended that opening the Vacuum plastic bag before SMT, and put the whole reel into the oven for dehumidification and drying (**Bake at 70 ~ 75℃≧24H**);

2.3.2 From the led taken out of the oven to the completion of high temperature welding (including multiple reflow welding, tin immersion, wave soldering, heating maintenance and other high temperature operations/operations), the time period shall be controlled **within 24Hours** (Under condition of **T<30℃, RH<60%**);

2.3.3 After the LED paste is printed on the PCBA, SMT process should be completed as soon as possible, **it is recommended not to exceed 1H;**

2.3.4 Bulk material LED, such as production surplus, machine material, maintenance material, can not be used directly if exposed to the air for a long time. It is recommended to be dehumidified and dried before being used.

Whole reel baking: 70 ~ 75℃* ≧24H or bulk led baking: 120℃*4H.

3. SMT Reflow Soldering

Refer to the parameters listed below, the experimental results prove that the TOP SMD LED meets the JEDEC J-STD-020C standards. As a general guideline, it is recommended to follow the SMT reflow temperature curve recommended by the solder paste manufacturer.

Curve Description	Lead-free
30℃ ~ 150℃ preheating slope	1～4 ℃/s
30℃ ~ 150℃ preheating time	60～120 s
150℃ to 200℃ constant temperature slope	0～3 ℃/s
150℃ ~ 200℃ constant temperature time	60～120 s
LIQUID REGION temperature (TL)	217℃
Peak Temperature (Tp)	245℃
Reflow slopeTime (tp)	0～3 ℃/s
Reflow soldering time	45-90 s
Cooling Rate	-4～0 ℃/s
Room Temperature to Peak Holding Time	<6 min

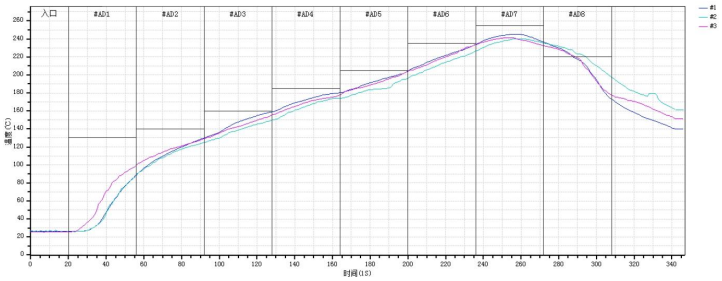

Remarks: 1. All the above temperatures refer to the temperatures measured on the surface of the package body

4. Assembly Precautions

1. Clip the LED from its side.	2. Neither directly touch the gel surface with the hand or sharp instrument, it may damage its internal circuit.	3. Not to be double stacked, it may damage its internal circuit.	4. Can not be stored in or applied in the acidic sites of PH<7.
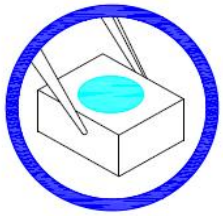	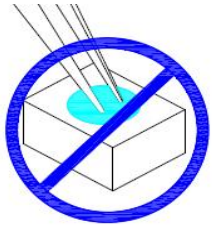	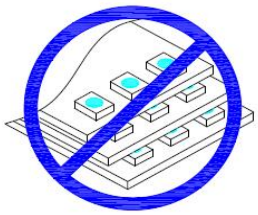	

Modify Record

Version №	Status Bar	Modify Content Summary	Date	Reviser	Approved
V1.0	N	New	20260822	Chen YongZhao	Yin HuaPing
V1.1	M	Modify LED Pin Definition	20261017	He WenBin	Yin HuaPing

Remarks:

1. Version number plus "0.1" if for add & modify parameters, eg. V1.0 → V1.1
2. Major revision or many parameters modified, version number plus “1.0”, eg. V1.0 → V2.0
3. No version number is attached to Part Number

Initial version: V1.0, Status bar: N--New, A--Add, M--Modify, D--Delete.