# CUSTOMER DRAWING

| GENERAL TOLERANCE | | | | | |
|---|---|---|---|---|---|
| DIM.RANGE | 0 - 3 | >3-6 | >6-30 | >30-120 | >120-400 |
| TOLERANCE | ±0.1 | ±0.1 | ±0.2 | ±0.3 | ±0.5 |

| REVISION | | |
|---|---|---|
| REV. | DESCRIPTION | DATE |
| H | CORRECT DIMENSION A | 2017-02-02 |
| I | ADD 95MM2 CABLE OPTION | 2017-09-14 |
| J | ADD NOTE 3<br>ADD DURABILITY<br>ADD DIA. B& DIM "17.2"<br>CORRECT OPERATING TEMPERATURE | 2020-01-16 |
| K | ADD DUST CAP AND NOTE 4 | 2020-09-09 |

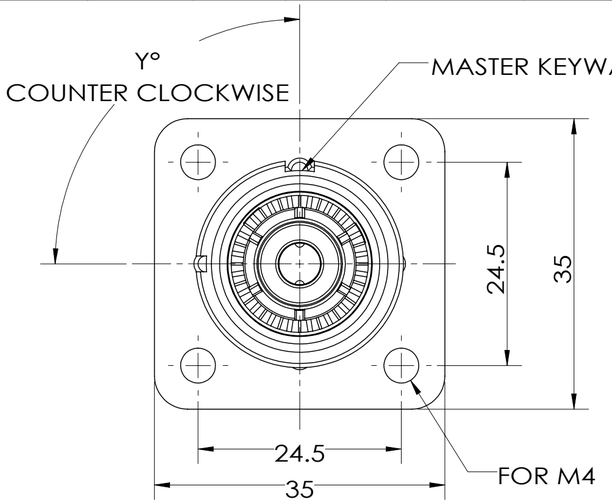


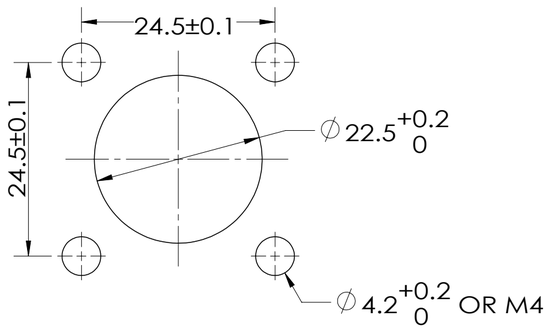


RECOMMENDED PANEL CUT OUT

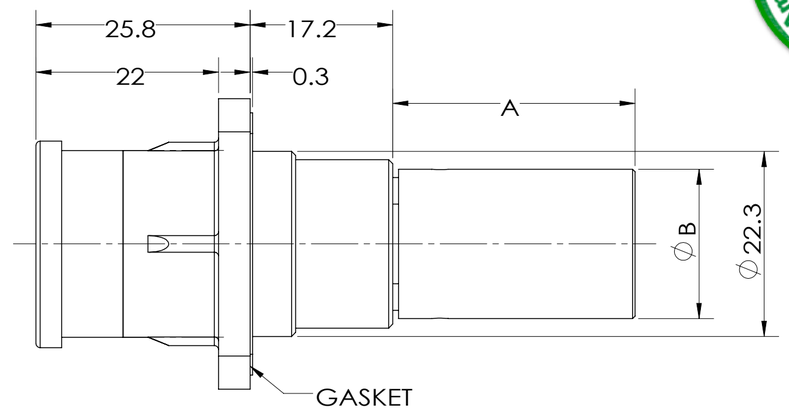


**Crimp Type**

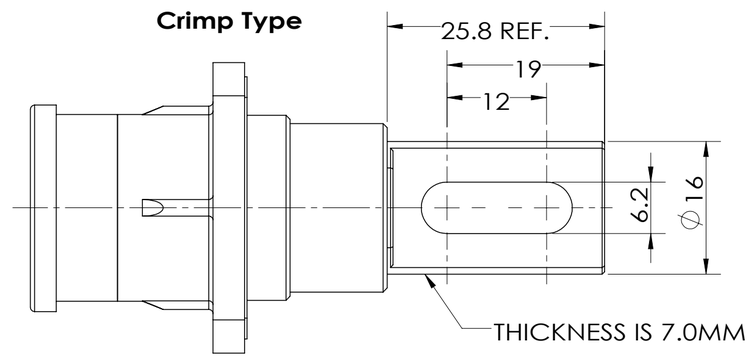


**Busbar Type**

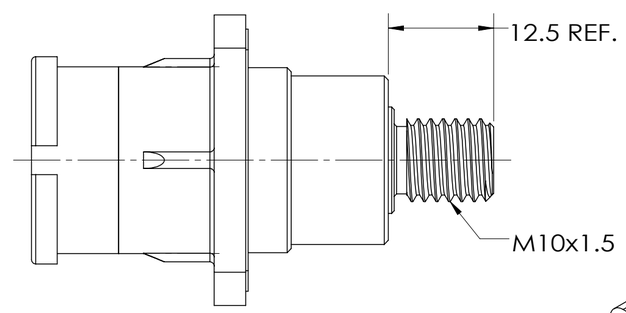


**Screw Type**

MFG NUMBER: C10-730191-( ) ( ) ( ) ( )

COLOR
PIN TYPE
SEALING
KEYWAY

CODE NUMBER: SLPIRC ( ) P ( ) ( ) ( )

PIN TYPE
SEALING
COLOR
KEYWAY

| DIMENSION A | DIAMETER B | WIRE SIZE |
|---|---|---|
| 22.8 REF. | 14 | 50 SQMM |
| 25.8 REF. | 16 | 70 SQMM |
| 28.8 REF. | 18 | 85 SQMM<br>95 SQMM |

| ITEM | OPTION | CODE NUMBER | MFG NUMBER |
|---|---|---|---|
| COLOR | ORANGE | O | 0 |
| | BLACK | B | 1 |
| | RED | R | 2 |
| PIN TYPE | 50 SQMM CRIMPING | 50C | 5 |
| | 70 SQMM CRIMPING | 70C | 7 |
| | 85 SQMM CRIMPING<br>95 SQMM CRIMPING | 85C | 8 |
| | BUSBAR | B | 1 |
| | SCREW | T | 2 |
| SEALING | IP67(MATED) | S | 0 |
| | NO SEALING | N | 1 |
| KEYWAY ( Y° ) | 90° | 0 | 0 |
| | 180° | 1 | 1 |
| | 60° | 2 | 2 |
| | 120° | 3 | 3 |
| | 150° | 4 | 4 |

## SPECIFICATIONS

| | |
|---|---|
| CURRENT RATING | 200A MAX FOR 50 SQMM<br>250A MAX FOR 70 SQMM<br>300A MAX FOR 85 SQMM<br>350A MAX FOR 95SQMM |
| OPERATING VOLTAGE | 1000V DC MAX. |
| OPERATING TEMPERATURE (AMBIENT) | -40°C~+105°C |
| CONTACT RESISTANCE | 0.5mΩ MAX. |
| PROTECTION CLASS | IP67(MATED) |
| DURABILITY | 100 CYCLES MIN |

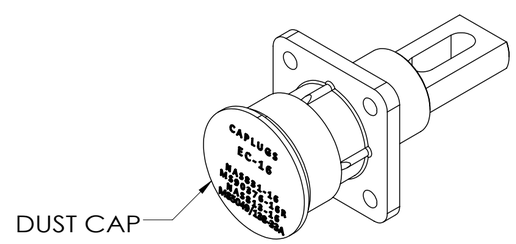


(K) DUST CAP ASSEMBLY DIAGRAM

4. DUST CAP SHOULD BE REMOVED BEFORE THE PLUG MATING IN. (K)
3. RECOMMENDED PRAT NUMBER FOR SCREW TYPE: C10-763709-( ).
2. RECOMMEIF CHOOSE NO SEALING TYPE, THERE WILL BE NO GASKET.
1. THE REFERENCED PRODUCT SHALL BE COMPLIANT TO RoHS DIRECTIVE.

NOTES:

THIS DOCUMENT CONTAINS PROPRIETARY INFORMATION AND SUCH INFORMATION MAY NOT BE DISCLOSED TO OTHERS FOR ANY PURPOSE OR USED FOR MANUFACTURING PURPOSES WITHOUT WRITTEN PERMISSION FROM THE AMPHENOL CORP.

UNLESS OTHERWISE SPECIFIED

LINEAR DIMENSIONS ARE IN: **MILLIMETERS**
TOLERANCES:
ANGLES= ±2°
DEFAULT LINEAR TOLERANCES SEE TABLE

DIM. & TOL. PER ASME Y14.5M-1994;
DRM PER MIL-DTL-31000;
OTHER AMPHENOL STANDARDS: 9-3800

LEGENDS:
=FLAG NOTE CALL OUT REFERENCE

THIRD ANGLE PROJECTION

| APPROVALS | | DATE |
|---|---|---|
| PREPARED BY: | YueXiang Zhang | 2016-11-13 |
| ENGINEER IN CHANGE: | Seven Xie | |
| DESIGN MANAGER: | Rob Weng | |
| PRODUCT GROUP: | C&1 | |
| AIPG DIVISION: | | |
| MATERIAL SPEC | PROCESS SPEC | |
| N/A | N/A | |

**AMPHENOL INDUSTRIAL OPERATIONS**
Amphenol Technology(Zhuhai)Co.,Ltd
No.63, Xinghan Road, Sanzao Town, Jinwan, Zhuhai, PRC

U

**10.3MM SURLOK PLUS RECEPTACLE**

| SIZE | CAGE CODE | DOCUMENT NUMBER | REV |
|---|---|---|---|
| C | 77820 | 10-730191-( ) | K |

SCALE: 2:1 | REF: N/A | SHEET 1 OF 1