# CHARX ST2C-DC150-6,0MCS00P - DC charging cable

1674677

https://www.phoenixcontact.com/gb/products/1674677

Please be informed that the data shown in this PDF document is generated from our online catalog. Please find the complete data in the user documentation. Our general terms of use for downloads are valid.



CHARX connect standard, CCS type 2, DC charging cable, 150 A permanent, 1000 V DC, with vehicle charging connector and open cable end, cable: 6 m, black, straight, with four-wire measurement technology, with analog temperature sensors, with replaceable mating face frame, with replaceable DC power contacts, with connected PP contact, PHOENIX CONTACT logo, IEC 62196-3, for charging electric vehicles (EV) with direct current (DC), IP67 degree of protection

## Product description

DC charging cable with vehicle charging connector and free cable end for fast charging of electric vehicles (EV) with direct current (DC) via CCS type 2 vehicle charging inlets, for installation at charging stations for e-mobility (EVSE)

## Your advantages

- Broad portfolio for all DC charging applications in the medium power range
- Particularly robust and durable connector design for high availability
- Prepared for four-wire measurement technology, enabling simple billing compliant with calibration laws
- High-level safety with two-chamber sealing system for the separation of DC+ and DC-
- Fast and cost-effective maintenance with exchangeable mating face including power contacts
- Developed and produced in accordance with the IATF 16949 automotive standard and ISO 9001

## Commercial data

| | |
|---|---|
| Item number | 1674677 |
| Packing unit | 1 pc |
| Minimum order quantity | 1 pc |
| Sales key | XWBMHD |
| Product key | XWBMHD |
| GTIN | 4067923225800 |
| Weight per piece (including packing) | 9,614 g |
| Weight per piece (excluding packing) | 8,608 g |
| Customs tariff number | 85444290 |
| Country of origin | Information on the country of origin is provided with the delivery. |

## Technical data

### Notes

| | |
|---|---|
| General | IP67 degree of protection |

### Product properties

| | |
|---|---|
| Product type | DC charging cable |
| Product family | CHARX connect standard |
| Type | DC charging cable |
| | with vehicle charging connector and open cable end |
| Design | with four-wire measurement technology |
| | with analog temperature sensors |
| | with replaceable mating face frame |
| | with replaceable DC power contacts |
| | with connected PP contact |
| | no liquid cooling |
| Charging standard | CCS type 2 |
| Charging mode | Mode 4 |
| Affixed logo | PHOENIX CONTACT logo |

### Electrical properties

| | |
|---|---|
| Temperature monitoring | 2x Pt 1000 |

Charging power and current (DC charging)

| | |
|---|---|
| Type of charging current | DC |
| Charging current | 150 A DC |
| Charging power | 150 kW |
| Rated voltage | 1000 V |

Charging power and current (DC charging in Boost Mode)

| | |
|---|---|
| Type of charging current | DC Boost Mode |

Pin assignment (Power contacts)

| | |
|---|---|
| Note on the connection method | Crimp connection, cannot be disconnected |
| Number | 3 (PE, DC+, DC-) |
| Rated voltage | 1000 V DC |
| Rated current | 150 A (up to 40 °C) |

Pin assignment (Signal contacts)

| | |
|---|---|
| Note on the connection method | Crimp connection, cannot be disconnected |
| Type of signal transmission | Pulse width modulation with modulated Powerline communication in accordance with ISO/IEC 15118 / DIN SPEC 70121 |
| Number | 2 (CP, PP) |
| Rated voltage | 30 V AC |
| Rated current | 2 A |

| | |
|---|---|
| Coding | 1500 Ω (between PE and PP) |
| | PP signal contact connected to cable |

Temperature sensors (Pt 1000)

| | |
|---|---|
| Sensor type | Pt 1000 |
| Standards/regulations | DIN EN 60751 |
| Attachment point | 2 sensors for the DC contacts |
| Switch-off temperature | 90 °C |

## Dimensions

Vehicle charging connector

| | |
|---|---|
| Width | 72 mm |
| Height | 181.1 mm |
| Depth | 285.3 mm |

## Material specifications

| | |
|---|---|
| Color (Housing) | black (9005) |
| Color (Handle area) | black (9005) |
| Color (Mating face) | black (9005) |
| Color (Cable) | black (9005) |
| Material (Vehicle charging connector) | Plastic |
| Material (Cable outer sheath) | TPE-U |
| Material (Contact surface) | Silver |
| Note | The color appearance and gloss level of the charging cable may vary. |
| Flammability rating according to UL 94 | V0 (Mating face) |

## Cable/line

| | |
|---|---|
| Cable length | 6 m ±50 mm |
| Wiring standards/regulations | DIN EN 50620 |
| Wiring certifications | VDE-Reg. |
| Cable type | Class 6 |
| Cable type | straight |
| Cable structure | 2 x 35 mm² + 1 x 16 mm² + 2 x 0.75 mm² + 6 x 0.5 mm² |
| External cable diameter | 26.10 mm ±0.5 mm |
| Outer sheath, material | TPE-U |
| Stripping length of the sheath | 180 mm ±10 mm |
| Stripping length | 180 mm ±10 mm |
| Cable resistance | 0.000272 Ω/m |
| Bending radius | 261 mm ±1 mm (10 x D) |

## Mechanical properties

Mechanical data

| | |
|---|---|
| Insertion/withdrawal cycles | > 10000 |

| | |
|---|---|
| Insertion force | < 100 N |
| Withdrawal force | < 100 N |

## Environmental and real-life conditions

### Ambient conditions

| | |
|---|---|
| Degree of protection (Vehicle charging connector) | IP67 (plugged in; when plugged in and ready to operate, the degree of protection is only ensued if both plug-in components are original products from Phoenix Contact or suitable standard-compliant products) |
| Ambient temperature (operation) | -30 °C ... 40 °C |
| | max. 55 °C (Current reduction required, observe the DC contact temperature limit value of 90°C) |
| Ambient temperature (storage/transport) | -40 °C ... 80 °C |
| Altitude | max. 5000 m (above sea level) |

## Standards and regulations

| | |
|---|---|
| Standards/specifications | IEC 62196-3 |
| Note | Compliant with AFIR - EU 2025/656 |

## Drawings

Schematic diagram

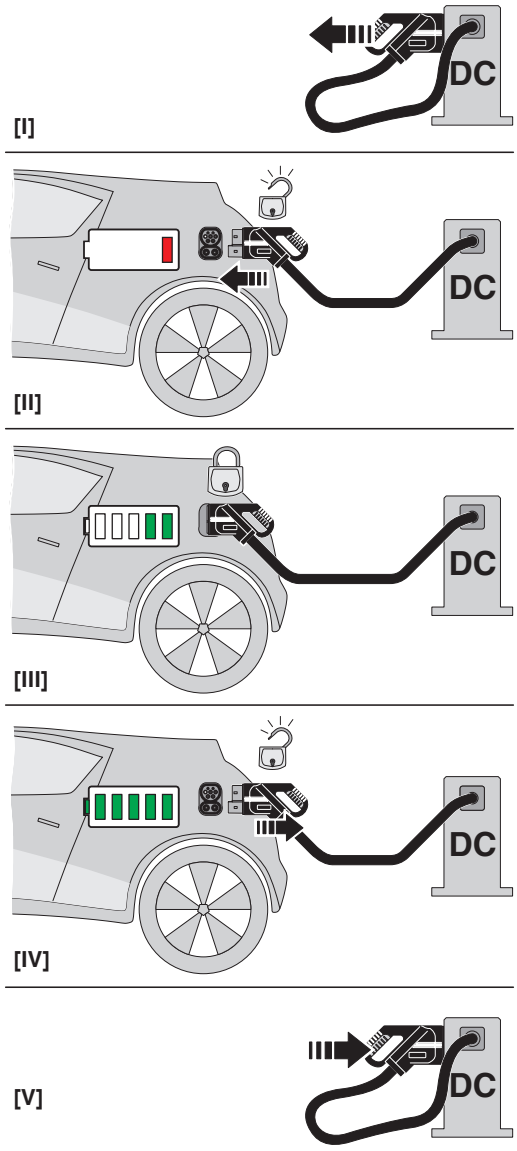


Operating instructions

Schematic diagram

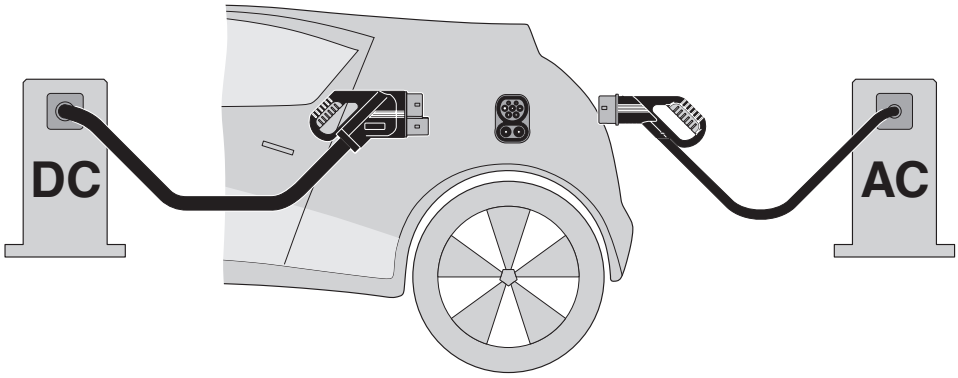


The Combined Charging System (CCS) principle - standard-compliant charging system for electric vehicles, which supports both conventional AC charging and fast DC charging. Both Vehicle Connectors fit into the CCS Vehicle Inlet.

Schematic diagram

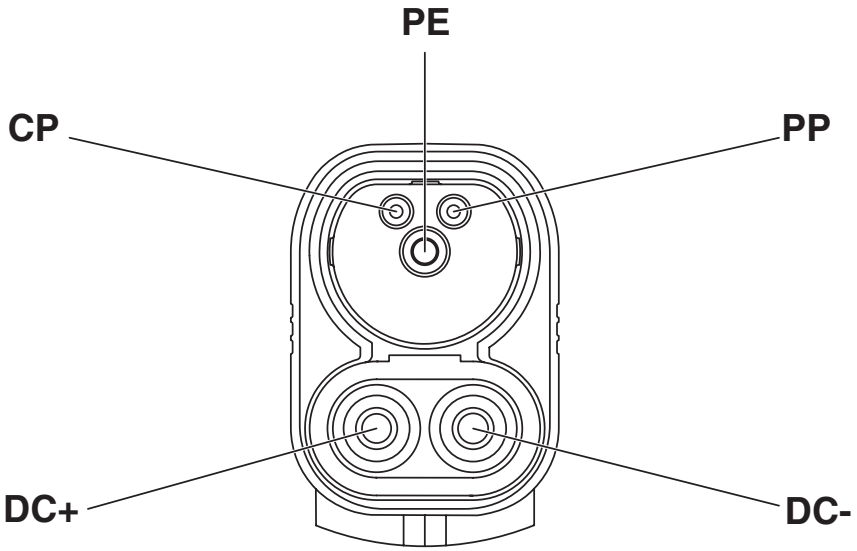


Pin assignment of the Vehicle Connector

Schematic diagram

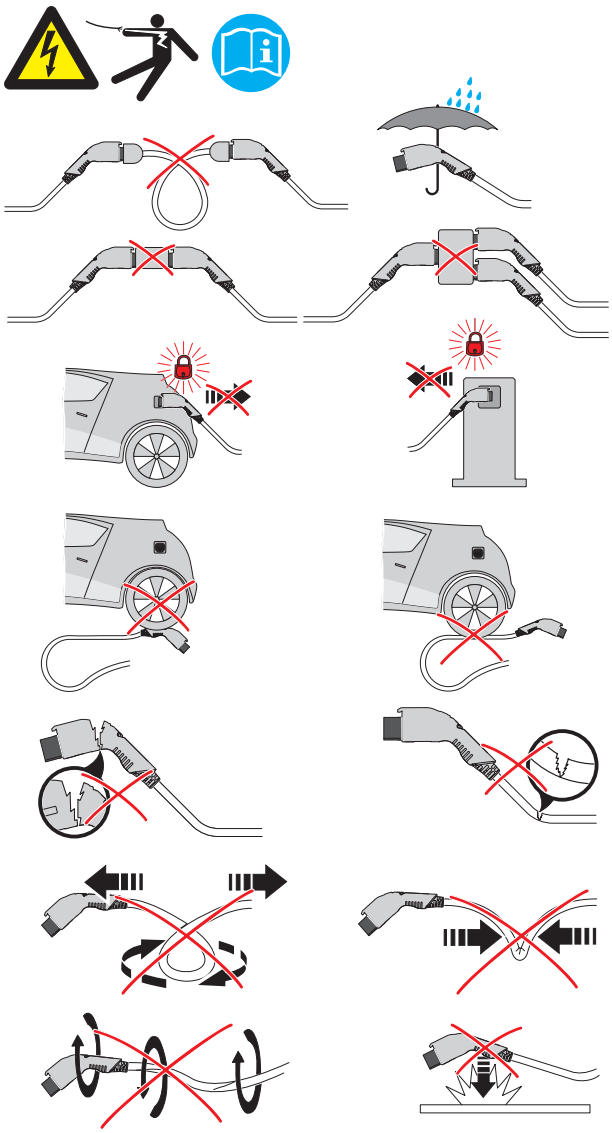

Warnings regarding use

Schematic diagram

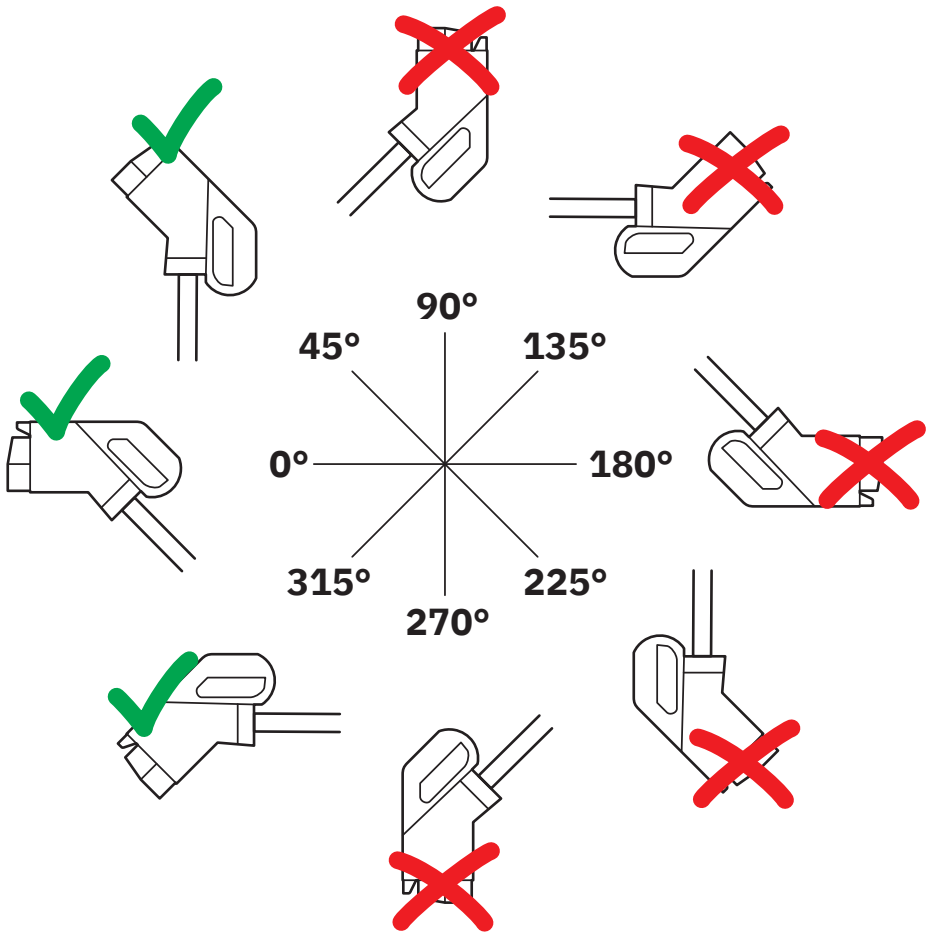


The resting position must be installed in the charging station such that the user cannot hang up the vehicle connector upside down (90° to 270°). However, positions rotated upward (45°) or downward (315°) are options for a resting position.

## Classifications

### ECLASS

| | |
|---|---|
| ECLASS-13.0 | 27144705 |
| ECLASS-15.0 | 27144705 |

### ETIM

| | |
|---|---|
| ETIM 10.0 | EC002897 |

## Environmental product compliance

EU RoHS

| | |
|---|---|
| Fulfills EU RoHS substance requirements | Yes, No exemptions |

China RoHS

| | |
|---|---|
| Environment friendly use period (EFUP) | EFUP-E |
| | No hazardous substances above the limits |

EU REACH SVHC

| | |
|---|---|
| REACH candidate substance (CAS No.) | No substance above 0.1 wt% |


Phoenix Contact 2026 © - all rights reserved
https://www.phoenixcontact.com



PHOENIX CONTACT Ltd
Halesfield 13, Telford
Shropshire, TF7 4PG
01952 681700
info@phoenixcontact.co.uk