DOCUMENT NO.	SHEET	REV.
( )10-738726-( )	SHEET 1 OF 1	C

CUSTOMER DRAWING

GENERAL TOLERANCE					
DIM. RANGE	0.5 ~ 3	> 3 ~ 6	> 6 ~ 30	> 30 ~ 120	> 120 ~ 400
TOLERANCE	±0.1	±0.1	±0.2	±0.3	±0.5

REVISIONS		
REV	DESCRIPTION	DATE
B	UPDATE MFG & CODE TABLE	2018-03-26
C	ADD NO HVIL OPTION	2019-10-10

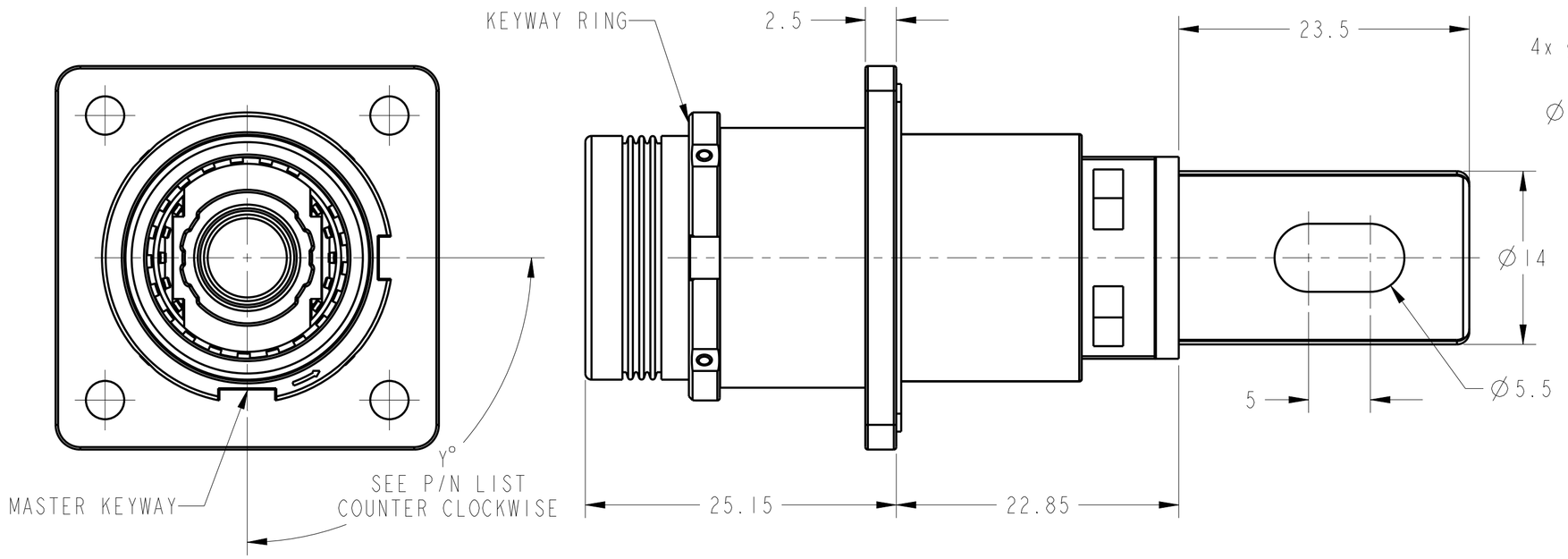

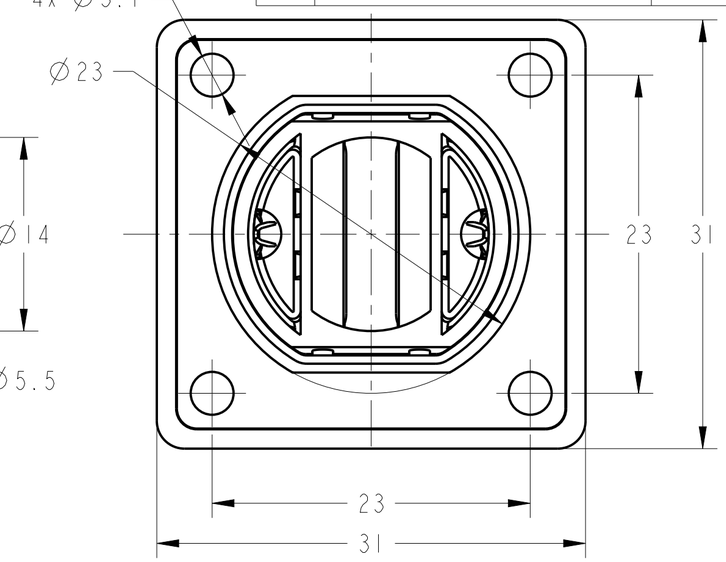

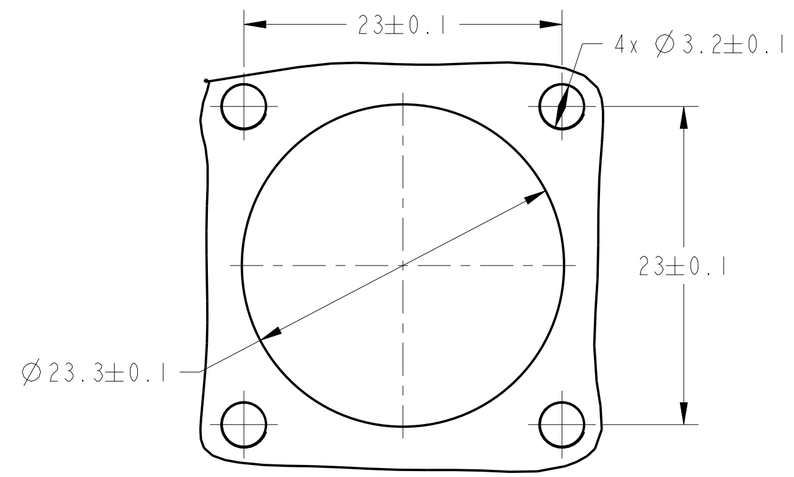

PANEL CUT-OUT FOR REFERENCE

MFG PART NUMBER: ( )10-738726-( ) ( ) ( ) ( )

- (C) HVIL OPTION, SEE TABLE I
- BASE NUMBER
- COLOR OF FINGER PROOF HEAD, SEE TABLE I
- PIN TYPE, SEE TABLE I
- SEALING, SEE TABLE I
- KEYWAY, SEE TABLE I

CODE NUMBER REFERENCE: SLPIRB ( ) P ( ) ( ) ( ) E ( )

- BASE NUMBER
- PIN TYPE, SEE TABLE I
- PANEL MOUNT
- SEALING, SEE TABLE I
- COLOR OF FINGER PROOF HEAD, SEE TABLE I
- KEYWAY, SEE TABLE I
- EMI
- (C) HVIL OPTION, SEE TABLE I

TABLE I			
ITEM	DESCRIPTION	MFG NUMBER	CODE NUMBER
COLOR OF FINGER PROOF HEAD	ORANGE	1	O
	BLACK	2	B
	RED	3	R
PIN TYPE	BUSBAR	1	B
SEALING	IP67 SEALED	0	S
	NO SEALED	1	N
KEYWAY (Y°)	90°	0	0
	270°	1	1
	60°	2	2
	120°	3	3
	150°	4	4
(C) HVIL OPTION	HVIL	C	H
	NO HVIL	N	BLANK

SPECIFICATIONS

CURRENT RATING	250 Amps MAX
OPERATING VOLTAGE	1000V DC/AC
OPERATING TEMPERATURE	-40°C-125°C
PROTECTION CLASS	IP67 (MATED)

1. THE REFERENCED PRODUCT SHALL BE COMPLIANT TO RoHS DIRECTIVE.

NOTES:

THIS DOCUMENT CONTAINS PROPRIETARY INFORMATION AND SUCH INFORMATION MAY NOT BE DISCLOSED TO OTHERS FOR ANY PURPOSE OR USED FOR MANUFACTURING PURPOSES WITHOUT WRITTEN PERMISSION FROM THE AMPHENOL CORP.

N/A
NEXT ASSEMBLY
METRIC DOCUMENT

PRO/ENGINEER INFORMATION
Pro/e Model Used:
10-738726_RECEPTACLE.ASSEM
Drawing Name:
C10-738726_ABROAD

UNLESS OTHERWISE SPECIFIED
LINEAR DIMENSIONS ARE IN:
MILLIMETERS
TOLERANCES:
ANGLES= ±2°
DEFAULT LINEAR TOLERANCES SEE TABLE
DIM.& TOL. PER ASME Y14.5M-1994;
DRM PER MIL-DTL-31000;
OTHER AMPHENOL STANDARDS: 9-9318
LEGENDS:
△=FLAG NOTE CALL OUT
REFERENCE ONLY

SPECIFICATIONS
MATERIAL SPEC.
N/A
PROCESS SPEC.
N/A

POS	QTY	PART NUMBER	DESCRIPTION	NOTE

PARTS LIST

APPROVALS		DATE
PREPARED BY	GRACE YANG	OCT-10-19
ENGINEER IN CHARGE	LINK LI	
DESIGN MANAGER	ROB WENG	
DESIGN ACTIVITY GROUP	C&I	

THIRD ANGLE PROJECTION

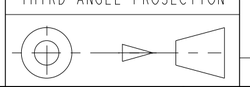

AMPHENOL INDUSTRIAL OPERATIONS
Amphenol Technology(Zhuhai)Co.,Ltd
No.63, Xinghan Road, Sanzao Town, Jinwan, Zhuhai, PRC

8.0MM SURLOK PLUS WITH EMI, RECEPTACLE

SIZE	CAGE CODE	DOCUMENT NO.	REV.
C	77820	( )10-738726-( )	C

SCALE: 3.0 | REF. N/A | SHEET 1 OF 1

DOCUMENT NO.	SHEET	REV.
( )10-738726-( )	SHEET 1 OF 1	C

FORMAT: C-L.E-Rev.B