Energizer
**Central / Eastern European Region**
+ 44 (0) 208 920 2306
www.energizer.eu

# Base (LR20)

D




## Specifications

| | |
|---|---|
| **Classification:** | Alkaline |
| **Chemical System:** | Zinc-Manganese Dioxide ($Zn/MnO_2$)<br>No added mercury or cadmium |
| **Designation:** | IEC-LR20 |
| **Nominal Voltage:** | 1.5 volts |
| **Nominal IR:** | 150 to 300 milliohms (fresh)* |
| **Operating Temp:** | -18°C to 55°C |
| **Typical Weight:** | 148.0 grams |
| **Typical Volume:** | 56.0 cubic centimeters |
| **Jacket:** | Plastic Label |
| **Shelf Life:** | 7 years at 21°C (80% of initial capacity) |
| **Terminal:** | Flat Contact |

* For additional information, please reference the IR technical white paper.

## Industry Standard Dimensions

(millimeters)

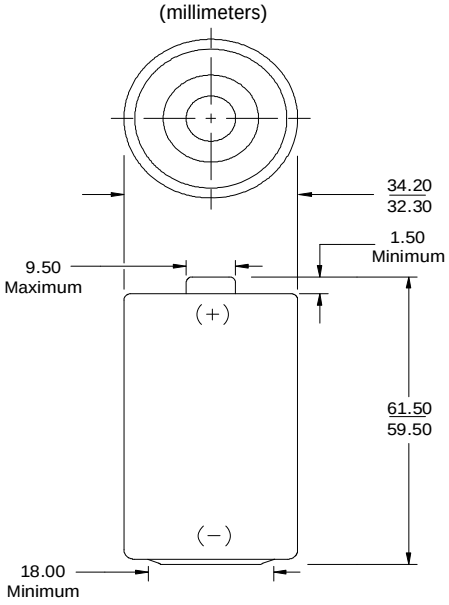


## Milliamp-Hours Capacity

Continuous discharge to 0.8 volts at 21°C

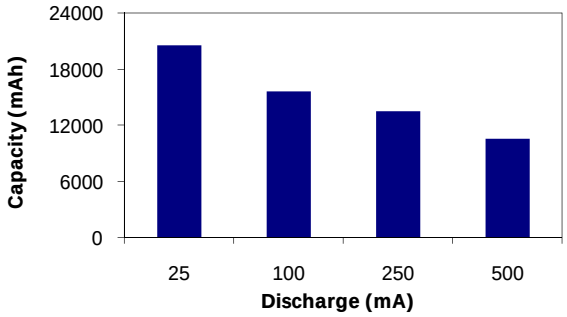


## Industry Standard Testing (21°C):

**RADIO**
**10 ohm 4 hrs/day**

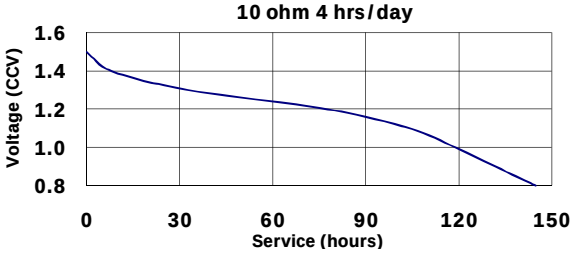


**TOY**
**2.2 ohm 1 hr/day**

**LIGHTING**
**2.2 ohm LIF**

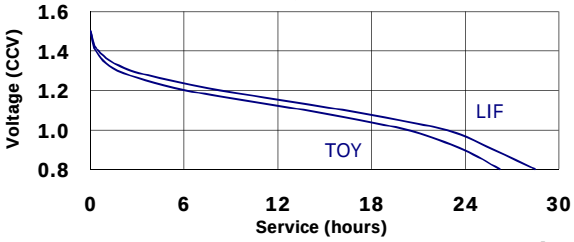


## Battery Selection Indicator

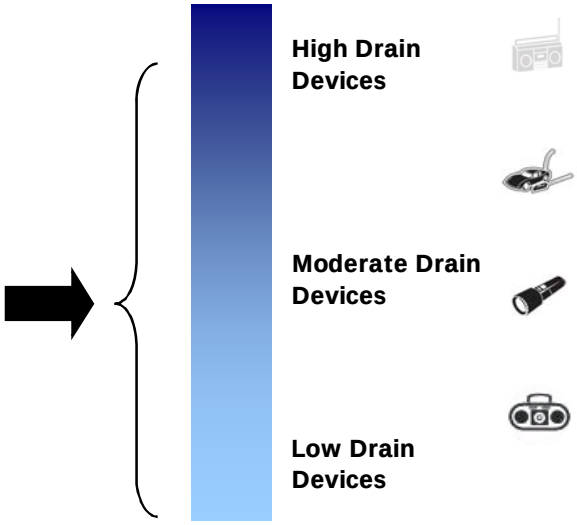


## Important Notice

This datasheet contains typical information specific to products manufactured at the time of its publication.

**©Energizer Holdings, Inc. - Contents herein do not constitute a warranty.**