Bellows suction cup (round)

SPB1 60 ED-65 SC050

Część nr..:10.01.06.02457

https://www.schmalz.com/10.01.06.02457

Bellows suction cup (round) with 1.5 corr. for dynamic handling of cardboard and rigid packaging



- Size: 60
- Suction cup material: Elastodur
- Material hardness [Shore A]: 65 Shore A
- Number of folds: 1,5

Dane projektowe

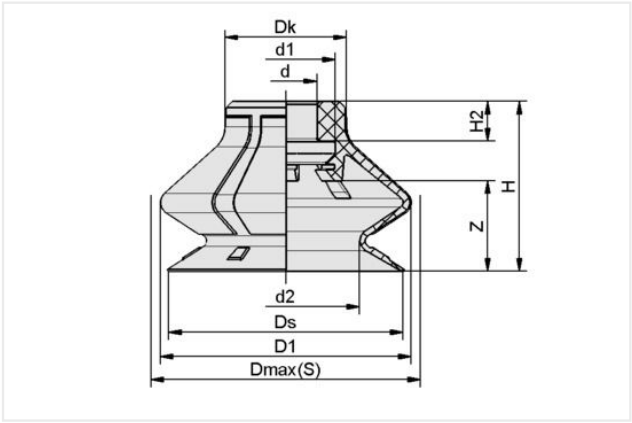

Atrybut	Wartość
d	11 mm
d1	17,50 mm
d2	38,60 mm
D1	65,70 mm
Dk	21,60 mm
Dmax(S)	69,60 mm
Ds	61,40 mm
H	36 mm
H2	7 mm
Z (Stroke)	22 mm

Note: Acceptable dimensional tolerances for elastomer parts concerning to DIN ISO 3302-1 M3

Dane techniczne

Atrybut	Wartość
Suction force (-600mbar)	78 N
Pull-off force	100,90 N
Lateral force	49,40 N
Volume	49,24 cm^3
Curve radius (min) (convex)	70 mm
Hose diameter (empf.) d	6 mm
Size	60

Kontakt z firmą Schmalz
Schmalz Sp.z.o.o. | ul. Fabianowska 131/A1, 62-052 Komorniki, Poland | +48 61 628 67 70 | schmalz@schmalz.pl

Bellows suction cup (round)

SPB1 60 ED-65 SC050

Część nr..:10.01.06.02457

https://www.schmalz.com/10.01.06.02457

Nipple family	SC 050
Number of folds	1,50
Suction cup material	Elastodur
Material hardness [Shore A]	65 Shore A
Weight	19,60 g
Product family	SPB1

Note: Suction force: The specified suction forces are theoretical values at a vacuum of -0.6 bar and with a dry, smooth and flat workpiece surface - they do not include a safety factor Hose diameter: The recommended hose diameter refers to a hose length of approx. 2 m

Akcesoria



SC 050 G1/4-AG MOD

Part no..:10.01.06.02487

Connection geometry: 050
Connection: G1/4"-M
Length L1: 26,5 mm
Fitting length: 7,2 mm
Nominal diameter dn: 6,1 mm



SC 050 G1/4-IG MOD

Part no..:10.01.06.02488

Connection geometry: 050
Connection: G1/4"-F
Length L1: 26,5 mm
Fitting length: 17,2 mm
Nominal diameter dn: 6,1 mm

Bellows suction cup (round)

SPB1 60 ED-65 SC050

Część nr..:10.01.06.02457

https://www.schmalz.com/10.01.06.02457



SIEB 17.5x0.8 MS-A2 280 0.28/0.16

Part no..:10.07.01.00308

External diameter D: 17,5 mm
Length L: 0,8 mm
Material: Brass / Stainless steel
Filter pore size: 280 µm



SC 050-AR NPT1/4-AG MOD

Part no..:10.01.06.02543

Connection geometry: 050-AR
Connection: NPT1/4-M
Length L1: 29 mm
Fitting length: 7,5 mm
Nominal diameter dn: 6,1 mm



SC 050-AR NPT1/4-IG MOD

Part no..:10.01.06.02546

Connection geometry: 050-AR
Connection: NPT1/4-F
Length L1: 28,5 mm
Fitting length: 19,2 mm
Nominal diameter dn: 6,1 mm