Aug.1.2025 Copyright 2025 HIROSE ELECTRIC CO., LTD. All Rights Reserved.
In case of consideration for using Automotive equipment / device which demand high reliability, kindly contact our sales window correspondents.

| | COUNT | DESCRIPTION OF REVISIONS | BY | CHKD | DATE | | COUNT | DESCRIPTION OF REVISIONS | BY | CHKD | DATE |
|---|---|---|---|---|---|---|---|---|---|---|---|
| △ | | | | | . . | △ | | | | | . . |
| △ | | | | | . . | △ | | | | | . . |
| △ | | | | | . . | △ | | | | | . . |

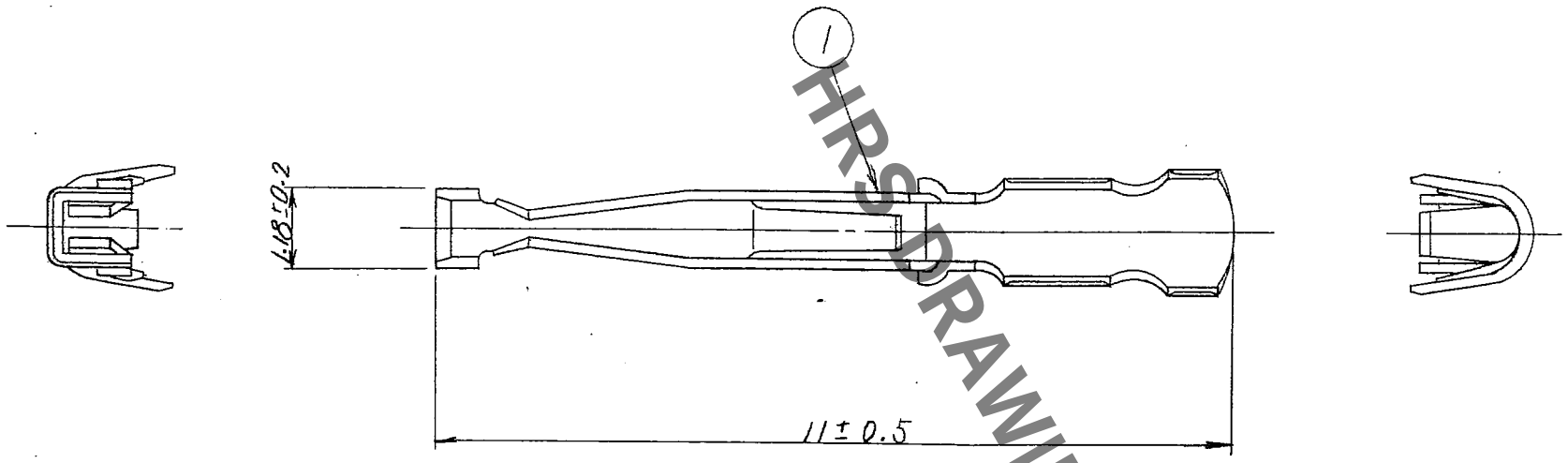


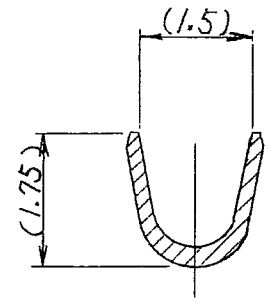


B-B

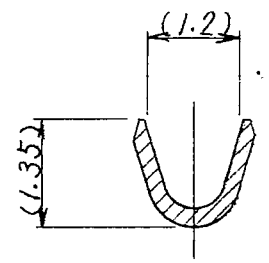


A-A

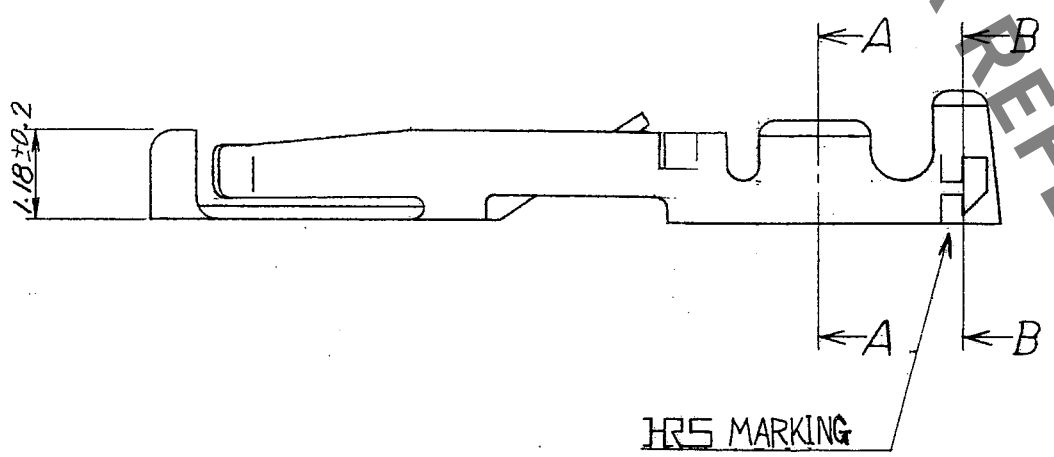


HRS DRAWING FOR REFERENCE

NOTE
1 THIS CONTACT IS APPLICABLE WIRE:AWG#24 TO 30
INSULATOR OUTER DIA.OF φ 1.15 OR LESS
2 APPLICABLE MANUAL CONTACT CRIMPING TOOL:
RP19-TC-12(CL150-0049-4)

| NO. | MATERIAL | FINISH, REMARKS |
|---|---|---|
| 1 | PHOSPHOR BRONZE | SILVER PLATING 2μm min.(100pcs/bag) |

| CODE NO.(OLD) | DRAWN | DESIGNED | CHECKED | APPROVED | RELEASED |
|---|---|---|---|---|---|
| CL | T.Kouatsu '05.10.13 | D.Matsume '05.10.13 | E.Kunii '05.10.13 | M.Saito 05.10.13 | . . |

| | | |
|---|---|---|
| SCALE 10 : 1 | DRAWING NO. EDC3-021921 | PART NO. RP19-SC-122 |
| UNITS mm | HRS HIROSE ELECTRIC CO., LTD | CODE NO. CL113-0270-0 1/1 |

| TO |
|---|
| R |
| |
| |
| |

FORM NO.229