2 Hanbury Road
Chelmsford
Essex
CM1 3AE
United Kingdom

T: +44 (0)1245-809110
F: +44 (0)1245-809112
E: sales.is@sgxsensortech.com
www.sgxsensortech.com

VQ548MP Datasheet

This datasheet describes the use of the VQ548MP Pellistor. This is commonly used, but not exclusively, in mining applications. It is a low power, intrinsically safe, extremely robust and poison-resistant device in a certified flameproof enclosure.
The VQ548MP has been designed to provide the basic sensor performance that will enable a suitable instrument to meet the various (Group 1) mining performance standards.
The VQ548MP, whilst being optimised for its methane response (up to 5% volume in air), will also detect some other flammable gases and vapours. For further information, contact SGX Sensortech.



FEATURES

- Low power – designed for battery operation
- Small size (16 x 20 mm)
- Compatible with instruments using VQ500 type sensor
- High resistance to mechanical shocks
- Assessed as intrinsically safe
- Low orientation effect
- ATEX/IECEx certified package
- The certification markings are:

ATEX: Ⓔx **II 1G Ex ia IIC Ga**
ATEX: Ⓔx **I M1 Ex ia I Ma**
IECEx: Ex ia IIC Ga
IECEx: Ex ia I Ma

OPERATING PRINCIPLE

The silicon pellistor structure consists of a pair of accurately micro machined diaphragms with two embedded planar heater meanders coated with a layer incorporating a noble metal catalyst for the detector device and with inert layer for the compensator device.

The meander acts both as an electrical heater and as a resistance thermometer. The device is mounted on a PCB with wire bonding and is surrounded by a plastic can with the end open to the atmosphere. If a flammable gas is present when the device is heated to about 400 – 500 °C, the gas will oxidise and the resultant release of energy will heat the device still further. This increase in temperature is detected as an increase in resistance of the meander. The temperature of the meander is also affected by ambient temperature and by variations in thermal conductivity of the air caused by the possible presence of inert gases such as carbon dioxide. To compensate for temperature changes not caused by the oxidation of the flammable gas a second, inert device is used. This compensator is made in the same way as a detector device except that instead of incorporating a catalyst in the coating layer, the device is treated so that oxidation cannot take place. The two devices are then used in a circuit that detects the difference in their resistances. Since the two devices are generally of a different colour, they have different emissivities and hence different slope resistances. Therefore, to obtain the best temperature performance, it is necessary on occasion to connect a fixed resistor in parallel with the compensator to correct for its higher slope resistance.

OPERATION

It is recommended that the detector and compensator be run in a Wheatstone bridge circuit.
A suitable circuit is shown below. In use, the bridge supply voltage should be stable to within + 0.05 V, or the output in clean air may change in sympathy. Although it is generally recommended that pellistors should be run with a constant voltage supply to the bridge, it is possible to use a constant current supply provided that the voltage across the bridge in clean air remains within the recommended limits.

Recommended circuit diagram

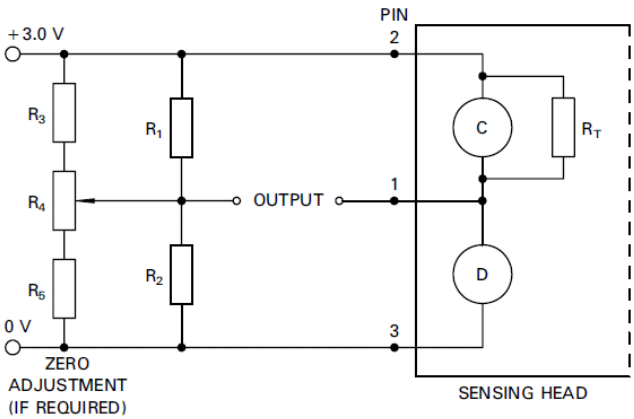

$R_1 = R_2 = 500\Omega$ to 10 kΩ
$R_3 = R_5 \simeq 10R_1$
$R_4 \simeq 20R_1$

Whilst SGX Sensortech has taken care to ensure the accuracy of the information contained herein it accepts no responsibility for the consequences of any use thereof and also reserves the right to change the specification of goods without notice. SGX Sensortech accepts no liability beyond the set out in its standard conditions of sale in respect of infringement of third party patents arising from the use of tubes or other devices in accordance with information contained herein.
In case of modification of the product, SGX disclaims all liability.

GENERAL DATA

This information relates to the device operating continuously in the recommended bridge circuit.

Gases detected . . . . . most flammable gases and vapours

Operation . . . . . continuous

Bridge supply voltage (see note 1) . . . . . 2.9 to 3.1V

Sensor current (at 3.0 ± 0.1V) . . . . . 39 to 47 mA
(<96mA at power on)

Minimum sensitivity (measured with 1% methane, 20% LEL, at 3.0 ± 0.1V) . . . . . 12 mV/% methane

Zero offset range in clean air (at 3.0 ± 0.1V) . . . . . ± 20 mV max

Response time (t90) (see note 2) . . . . . < 12 seconds

Maximum gas concentration (see note 3) . . . . . 5% methane in air

Long Term Zero drift (see note 4) . . . . . < 1.0 mV/month

Long Term Sensitivity drift (see note 5) . . . < 0.6 mV/month

MAXIMUM RATINGS (Absolute values)

Input voltages between pins:
pins 2 and 3 . . . . . 3.2 V
pins 1 and 2 . . . . . 1.6 V
pins 1 and 3 . . . . . 1.6 V

Operation, storage in original packaging and shipping:
Temperature . . . . . .-40 to +60 °C
(certified: -40 to +75°C for intrinsic safety)

Humidity . . . . . 0 to 95%RH non-condensing

NOTES

1. The polarity of the supply voltage may be reversed without harm. The only effect is to reverse the polarity of the output signal.
2. Maximum (slowest) response time measured at 3.0 ± 0.1 V using 1% methane in an SGX test manifold. Faster response times will be achieved in instruments/detectors with optimised gas delivery.
3. Exceeding these limits may degrade the stability of sensitivity or zero offset. The calibration of the sensor should be checked if it has been exposed, whilst operating, to gas concentrations greater than the Lower Explosive Limit.
4. Over 90 days period.
5. Measured at 3.0 ± 0.1 V using 1% methane, over 90 days period.

IMPORTANT PRECAUTIONS

Read the following instructions carefully before using the VQ548MP to avoid erroneous readings and to prevent the device from permanent damage.

- Heater voltages above the specified maximum rating can damage the MEMS Pellistor.
- Some compounds are known to affect the catalytic reaction of coating material used in pellistors.
  - I. Exposure to silicones (by far the most common & virulent poison), high levels of hydrogen sulfide (and other sulfur containing compounds), phosphates and phosphorous containing substances or lead containing compounds (e.g. tetraethyl lead) will irreversibly poison the sensor. High concentrations of flammable gas may also permanently affect the sensor response.
  - II. Lower concentrations of hydrogen sulfide and other compounds can cause a temporary loss in response. This is known as inhibition. Halogenated hydrocarbons such as Freons™, trichloroethylene, and methylchloride are also possible inhibitors. Sensors generally recover most of their original response once they are returned to fresh air.
  - III. Specific protection may be needed in applications where poisons or inhibitors are continuously present.
- SGX recommends using ESD protection equipment when handling the sensor.
- Please contact SGX Sensortech for any additional information.

CERTIFICATION

	ATEX	IECEx
Certificate:	**DEMKO 14 ATEX 1266U**	**IECEx ULD 14.0002U**
Standards:	**EN 60079-0:2012+A11:2013 EN 60079-11:2012 EN 60079-26:2007 EN 50303:2000**	**IEC 60079-0 ed6.0 (2011-06) IEC 60079-11 ed6.0 (2011-06) IEC 60079-26 ed2.0 (2006-08)**
Product Marking:	**II 1G Ex ia IIC Ga I M1 Ex ia I Ma**	**Ex ia IIC Ga Ex ia I Ma**
Certified Manufacturing Locations:	**SGX Europe Sp. z o.o., Ligocka St. 103, 40-568 Katowice, Poland SGX Sensortech (SA), Courtils 1, 2035 Corcelles-Cormondreche, Switzerland**	
Certificate Address:	**SGX Europe Sp. z o.o., Ligocka St. 103, 40-568 Katowice, Poland**	

INSTRUCTIONS SPECIFIC TO HAZARDOUS AREA INSTALLATIONS

(Ref : EU ATEX Directive 94/9/EC, Annex II, 1.0.6)

1. The VQ548MP Gas Sensor is component approved only and may not be used as a stand-alone item in a hazardous area without further protection.
2. There are no user-serviceable parts in the component.
3. The end-user/installer should be aware that the certification of the VQ548MP Gas Sensor relies on the following materials used in its construction, which are suitable for most common applications:

   Enclosure PEI-ULTEM 1000 or PPS-GF40

   Stainless Steel Mesh Flame Arrestor

   In accordance with the Note in EN60079-0:Clause 6.1, the end-user/installer shall inform the manufacturer of any adverse conditions that the VQ548MP Gas Sensor may encounter. This is to ensure that the VQ548MP Gas Sensor is not subject to conditions that may cause degradation of these materials.
4. There are no user-serviceable parts in the component.
5. The VQ548MP Gas Sensor has not been assessed as a safety device (EHSR 1.5).
6. The VQ548MP has been assessed to the following entity parameters:

   Ui: 10 V, Ii: 3.33 A, Pi: 1.3 W, Li: 0 H, Ci: 0 F
7. The sensors have been determined suitable for Group I and Group II environments, provided no Group I dust enters the sensor, for a service temperature range of -40°C to +75°C.
8. The sensors have been assessed for internal mounting only and shall not form part of the external enclosure of the end-product.
9. The sensors provide adequate separation between internal conductors and accessible external surfaces for voltages ≤ 10 V. The end-product designer must ensure that adequate separation is provided from conductors.
10. A minimum ingress protection rating of IP20 was considered for the purposes of the assessment. The end-product enclosure is required to give the required ingress protection (IP) rating for the intended environment.
11. The maximum surface temperature rise of the sensor has been determined to be 30 K.
12. The sensors have been subjected to the small component ignition test at a temperature of +100 °C in a diethyl ether atmosphere based on the maximum service temperature of +75 °C.
13. The end-product designer must limit the steady-state current into the sensor to less than 641 mA with considerations made to any other applicable clauses of the standard used for the end-product.

PACKAGE DIMENSIONS

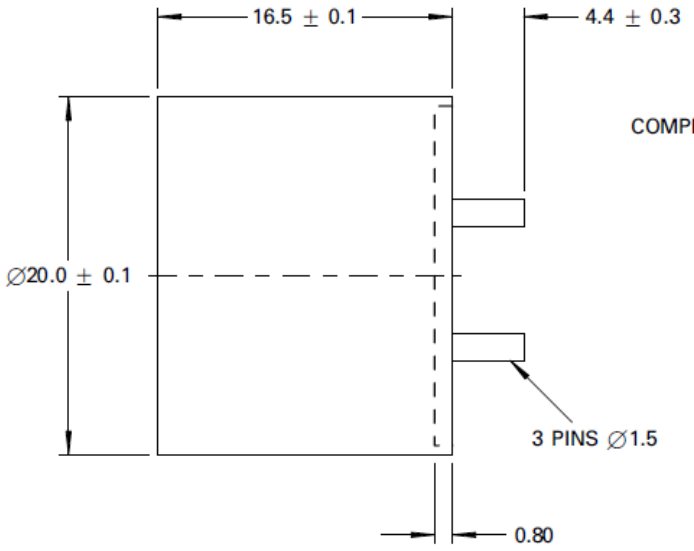

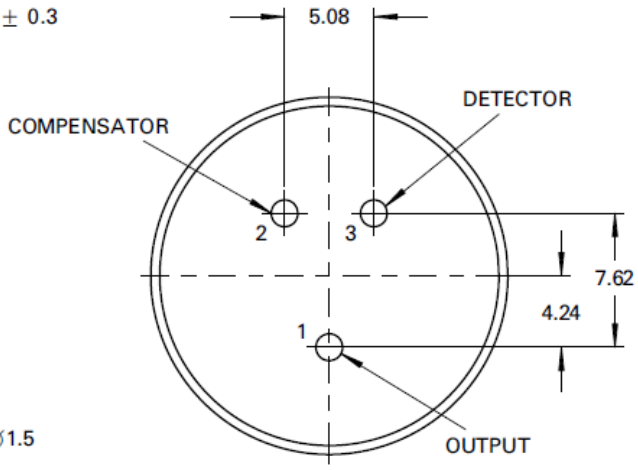

All dimensions in mm
Dimensions without limit are nominal

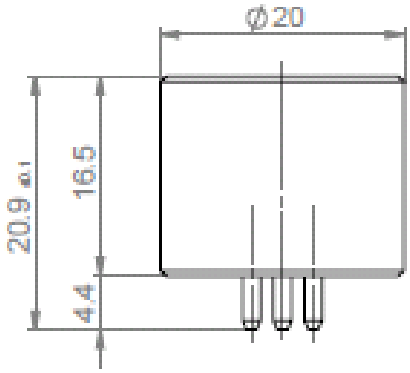

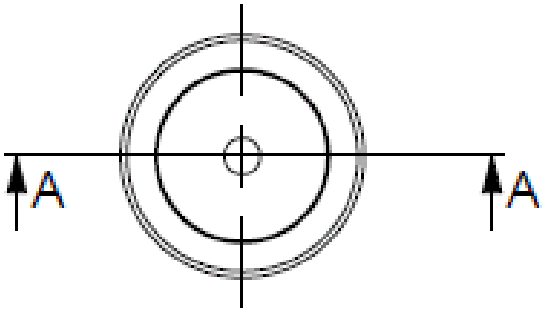

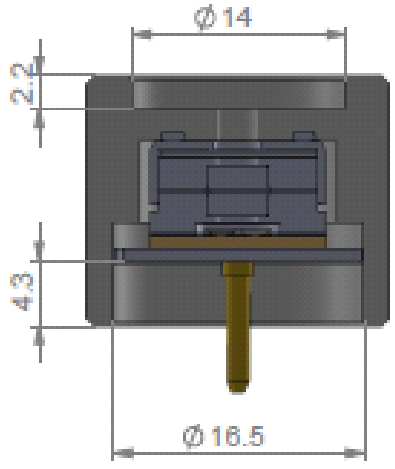

A-A
2.5 : 1