PN	Rev
4	Release
5	Release

REV.	ECN NO.	DATE	SIGN	DESCRIPTION
A	Initial Release	2026/06/18	Arvin Chan	Change Rev.04 To Rev.A

MSAS-XXPMMR-EE0003
└ XX: No. of Pin

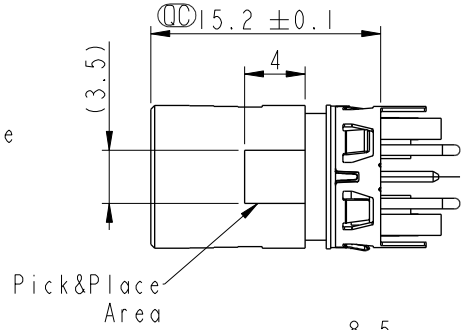

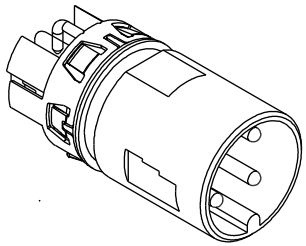

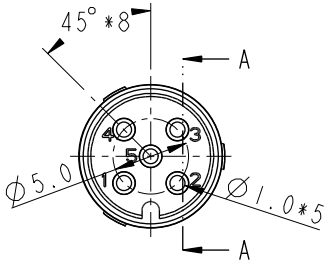

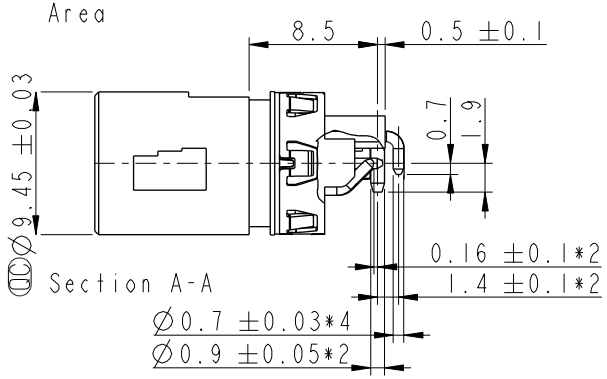

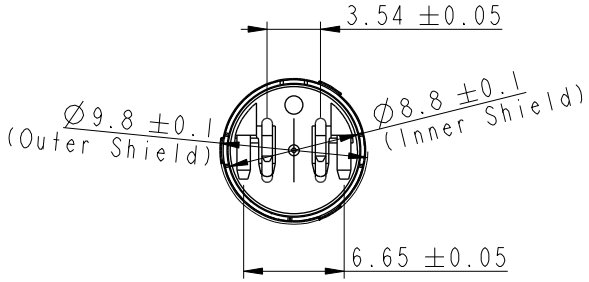

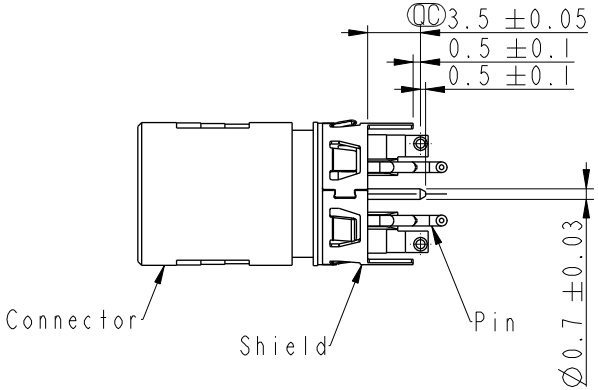

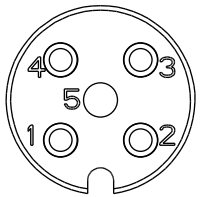

4Pin Assignments
Front View

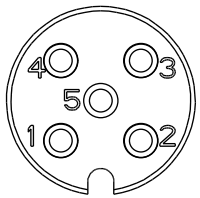

5Pin Assignments
Front View

Note:
* QC Important Dimension,
* Waterproof rate: Non-Waterproof
* Connector
  Connector: Thermoplastic, Black
  Pin: Copper Alloy, Gold Plated
  Shield: Metal

UNIT: mm

TOLERANCE
.X ±0.25
.XX ±0.1
.XXX ±0.05
ANGLES ±1°

TITLE: N SEN, MI2 A-SHLD, NONE RECEPTACLE, M, M, PCB R			
SCALE 4:1	SIZE A4	SHEET 1 OF 4	
REV. A	WC-REV. A.5	QC: Inspection item	

Amphenol LTW
安費諾亮泰企業股份有限公司

ITEM NO	DRAWN BY Arvin Chan	DATE 2025-06-18
DWG NO MSAS-XXPMMR-EE0003	CHECKED BY Fisher Wang	DATE 2025-06-18
CUSTOMER ALTW	APPROVED BY Fred Lee	DATE 2025-06-18

THIS DOCUMENT IS SUBJECT TO CHANGE WITHOUT NOTICE. IT IS CONFIDENTIAL AND A PROPERTY OF Amphenol LTW. DISCLOSURE TO THIRD PARTY HAS TO BE AUTHORIZED BY Amphenol LTW.

Recommneded MSAS-04PMMR-EE0003 PCB Layout

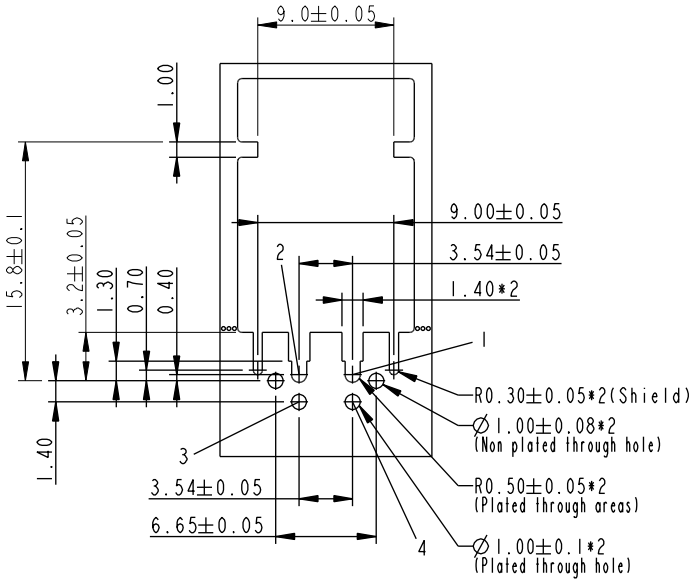

Recommended PCB Layout
PCB Thickness 1.0mm

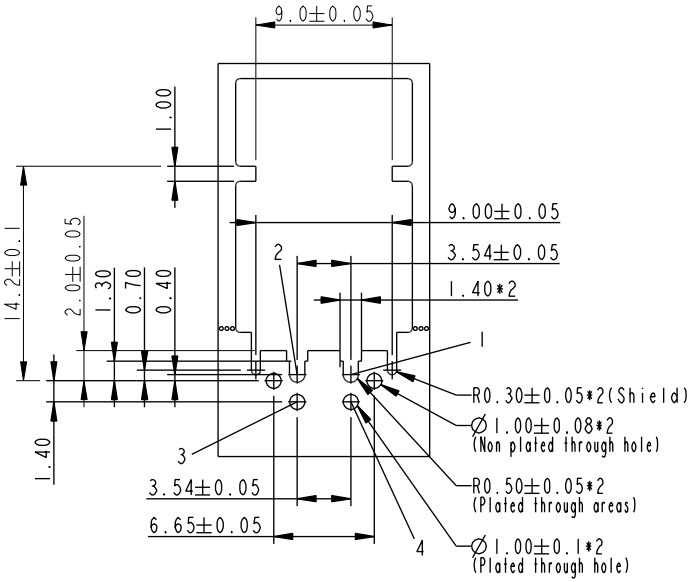

Recommended PCB Layout
PCB Thickness 1.6mm

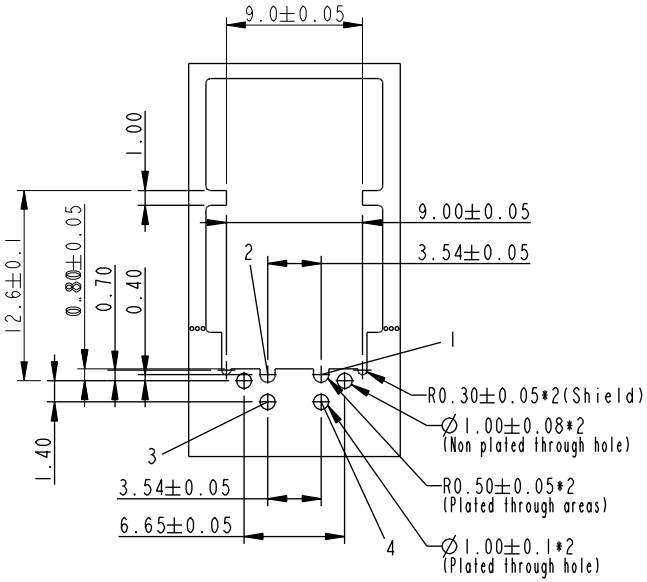

Recommended PCB Layout
PCB Thickness 2.0mm

UNIT:mm	TITLE: N SEN, M12 A-SHLD, NONE RECEPTACLE, M, M, PCB R			ITEM NO	DRAWN BY: Arvin Chan	DATE: 2025-06-18
TOLERANCE .X ±0.25, .XX ±0.1, .XXX ±0.05, ANGLES ±1°	SCALE: 2:1	SIZE: A4	SHEET 2 OF 4	DWG NO: MSAS-XXPMMR-EE0003	CHECKED BY: Fisher Wang	DATE: 2025-06-18
	REV.: A	WC-REV.: .0	QC: Inspection item	CUSTOMER: ALTW	APPROVED BY: Fred Lee	DATE: 2025-06-18

Amphenol LTW
安費諾亮泰企業股份有限公司

THIS DOCUMENT IS SUBJECT TO CHANGE WITHOUT NOTICE. IT IS CONFIDENTIAL AND A PROPERTY OF Amphenol LTW. DISCLOSURE TO THIRD PARTY HAS TO BE AUTHORIZED BY Amphenol LTW.

Recommneded MSAS-05PMMR-EE0003 PCB Layout

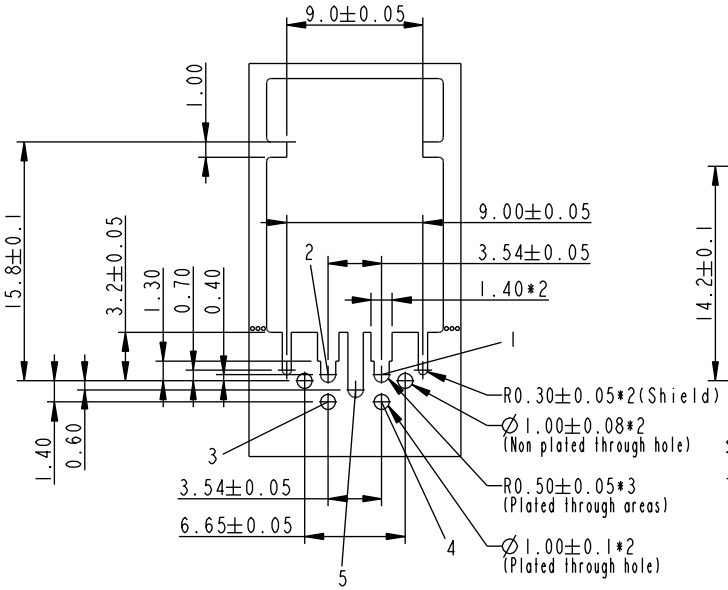

Recommended PCB Layout
PCB Thickness 1.0mm

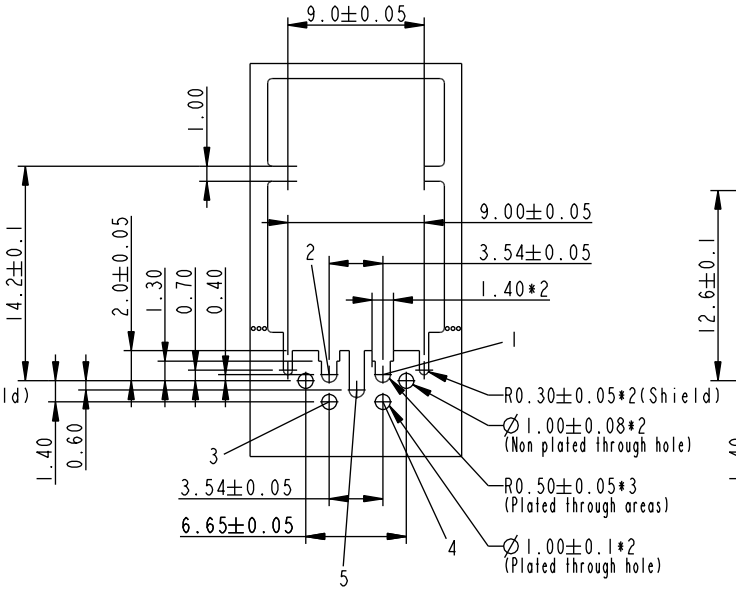

Recommended PCB Layout
PCB Thickness 1.6mm

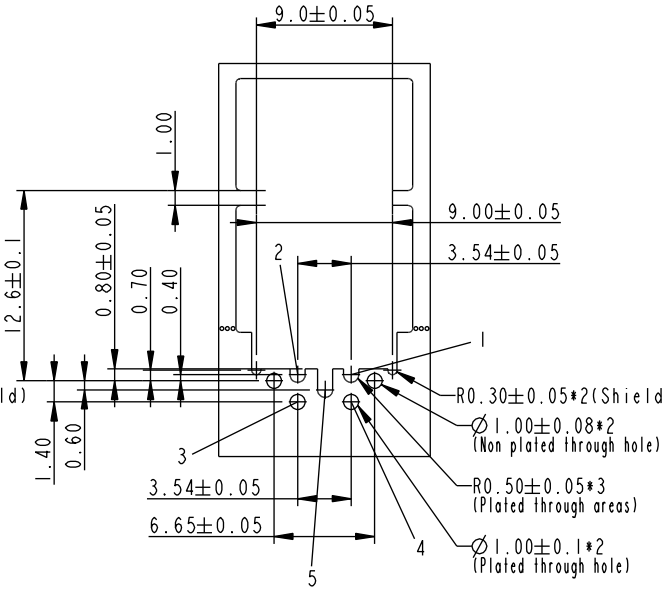

Recommended PCB Layout
PCB Thickness 2.0mm

UNIT:mm	TITLE: N SEN, M12 A-SHLD, NONE RECEPTACLE, M, M, PCB R			ITEM NO	DRAWN BY: Arvin Chan	DATE: 2025-06-18
TOLERANCE .X ±0.25 .XX ±0.1 .XXX ±0.05 ANGLES ±1°	SCALE: 2:1	SIZE: A4	SHEET 3 OF 4	DWG NO: MSAS-XXPMMR-EE0003	CHECKED BY: Fisher Wang	DATE: 2025-06-18
	REV.: A	WC-REV.: .0	QC: Inspection item	CUSTOMER: ALTW	APPROVED BY: Fred Lee	DATE: 2025-06-18

Amphenol LTW
安費諾亮泰企業股份有限公司

THIS DOCUMENT IS SUBJECT TO CHANGE WITHOUT NOTICE. IT IS CONFIDENTIAL AND A PROPERTY OF Amphenol LTW. DISCLOSURE TO THIRD PARTY HAS TO BE AUTHORIZED BY Amphenol LTW.

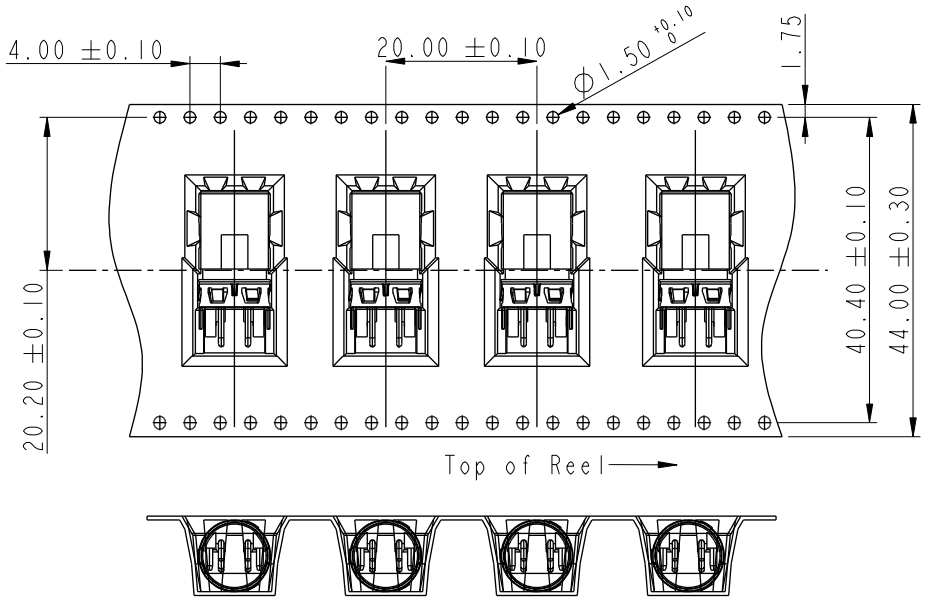

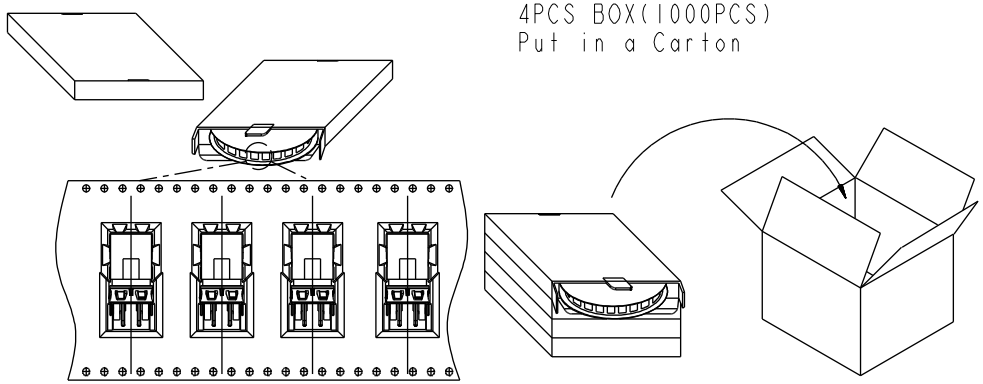

250PCS(Connector)/Tape&Reel,
Put in a Box
4PCS BOX(1000PCS)
Put in a Carton

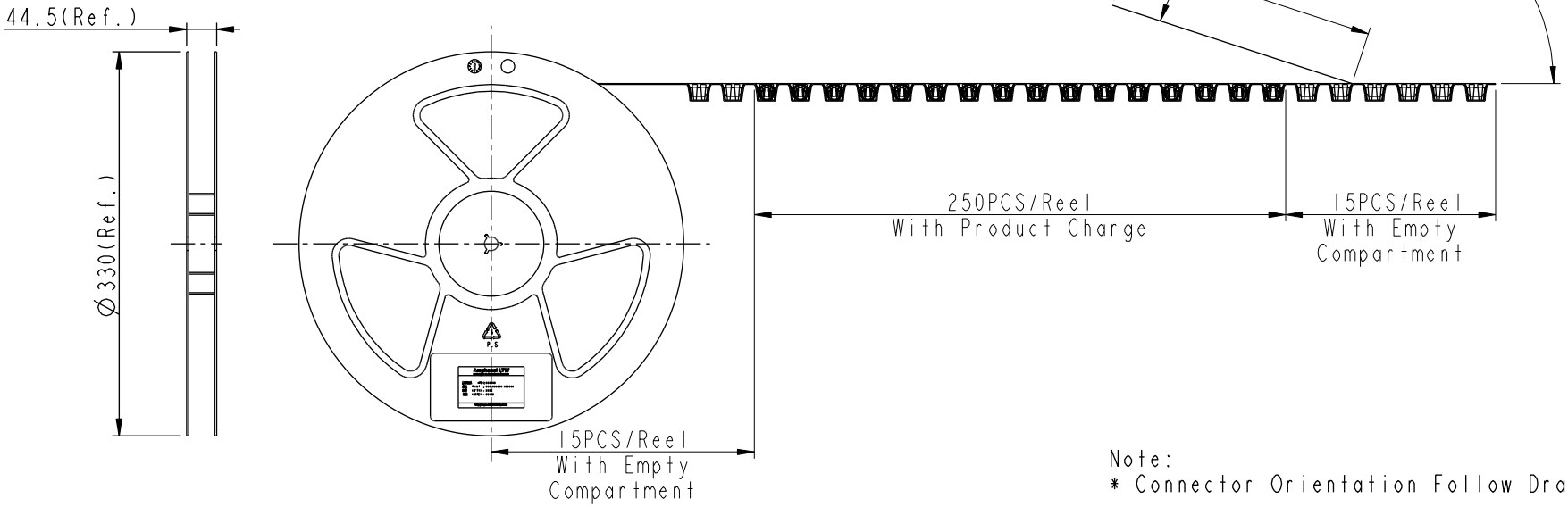

Note:
* Connector Orientation Follow Drawing

UNIT:mm	TITLE: N SEN, M12 A-SHLD, NONE RECEPTACLE, M, M, PCB R	Amphenol LTW 安費諾亮泰企業股份有限公司	ITEM NO	DRAWN BY: Arvin Chan	DATE: 2025-06-18
TOLERANCE .X ±0.25 .XX ±0.1 .XXX ±0.05 ANGLES ±1°	SCALE: 2:1 / SIZE: A4 / SHEET 4 OF 4		DWG NO: MSAS-XXPMMR-EE0003	CHECKED BY: Fisher Wang	DATE: 2025-06-18
	REV.: A / WC-REV.: .0	QC: Inspection item	CUSTOMER: ALTW	APPROVED BY: Fred Lee	DATE: 2025-06-18

THIS DOCUMENT IS SUBJECT TO CHANGE WITHOUT NOTICE. IT IS CONFIDENTIAL AND A PROPERTY OF Amphenol LTW. DISCLOSURE TO THIRD PARTY HAS TO BE AUTHORIZED BY Amphenol LTW.