3M™ SHIELDED/JACKETED, FLAT CABLE, .025", 2229 SERIES

30 AWG STRANDED, PVC, .025" PITCH

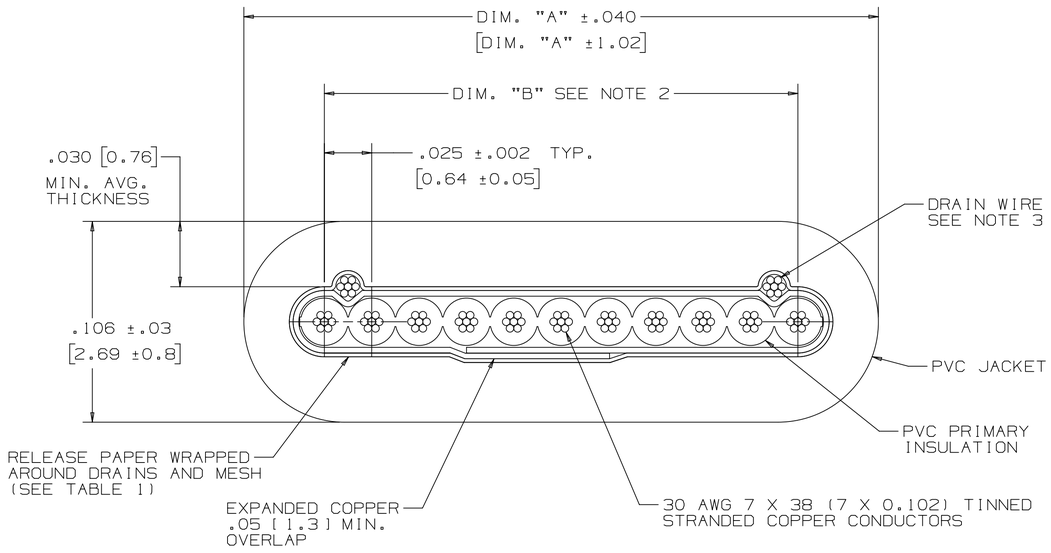

TABLE 1				
NUMBER OF CONDUCTORS	3M PART NUMBER	DIMENSION "A" REFERENCE	DIMENSION "B"	RELEASE PAPER
10	2229/10	.305 [7.75]	.225±.004 [5.72]	NO
12	2229/12	.355 [9.02]	.275±.004 [6.99]	
14	2229/14	.405 [10.29]	.325±.004 [8.26]	
15	2229/15	.425 [40.80]	.350±.004 [8.89]	
16	2229/16	.455 [11.56]	.375±.004 [9.53]	
20	2229/20	.555 [14.10]	.475±.004 [12.07]	
24	2229/24	.655 [16.64]	.575±.004 [14.61]	YES
25	2229/25	.680 [17.27]	.600±.004 [15.24]	
26	2229/26	.705 [17.91]	.625±.004 [15.88]	
30	2229/30	.805 [20.45]	.725±.006 [18.42]	
34	2229/34	.905 [22.99]	.825±.006 [20.96]	
36	2229/36	.955 [24.26]	.875±.006 [22.23]	
37	2229/37	.680 [24.89]	.900±.006 [22.86]	
40	2229/40	1.055 [26.80]	.975±.006 [24.77]	
50	2229/50	1.305 [33.15]	1.225±.006 [31.12]	
60	2229/60	1.555 [39.50]	1.475±.009 [37.47]	
64	2229/64	1.655 [16.64]	1.575±.009 [40.01]	

NOTE:
AVAILABLE IN STANDARD LENGTHS OF 100 FT OR 300 FT ROLLS, PLEASE SPECIFY WHEN ORDERING.
CONTACT 3M FOR AVAILABILITY OF ADDITIONAL CONDUCTOR COUNTS AND/OR CUSTOM ROLL LENGTHS.

* MEETS EXTERNAL WIRING REQUIREMENTS OF NATIONAL ELECTRICAL CODE, ARTICLE 725 (CL2).
* 30 AWG STRANDED WIRE ON .025 INCH CENTERS PERMITS MASS TERMINATION TO IDC CONNECTORS.
* 360 DEGREE EXPANDED COPPER SHIELDING.
* PRIMARY CABLE IS ZIPPABLE FOR BRANCHING OR DISCRETE TERMINATIONS.

NOTES

1. REGULATORY INFORMATION: VISIT 3M.com/regs
2. FOR DIMENSIONS ON PRIMARY CABLE, SEE TS-0875.
3. DRAIN WIRE:
   - 30 AWG 7 X 38 TPC WIRES.
   - POSITIONED BETWEEN THE LAYERS OF COPPER MESH AND RELEASE PAPER.
   - QTY 1 FOR < 20 CONDUCTORS, QTY 2 FOR 20 OR MORE CONDUCTORS

PHYSICAL:

INSULATION:
JACKET MATERIAL: POLYVINYL CHLORIDE (PVC)
COLOR: BLACK
PRIMARY MATERIAL: PVC
COLOR: GRAY

SHIELDING MATERIAL: EXPANDED COPPER

MARKING:
STANDARD: SEE "PRINTING ILLUSTRATION" BELOW
CONDUCTORS: 30 AWG, 7 X 38 AWG [7 X Ø0.102] TINNED STRANDED COPPER ALLOY

TABLE 2
ELECTRICAL CHARACTERISTICS

VOLTAGE RATING	USA: N.E.C. 725, CL2 30V	
INSULATION RESISTANCE	PRIMARY CABLE >1 X 10^{10} Ω/10 FT [3 m]	
	UNBALANCED	BALANCED
CHARACTERISTIC IMPEDANCE	56.48 Ω	95.98 Ω
CAPACITANCE	28.01 pf/ft [91.9 pf/m]	16.35 pf/ft [53.6 pf/m]
INDUCTANCE	0.0893 μH/ft [0.29 μH/m]	0.1506 μH/ft [0.49 μH/m]
PROPAGATION DELAY	1.58 ns/ft [5.08 ns/m]	1.57 ns/ft [5.15 ns/m]
VELOCTY OF PROPAGATION	64%	65%

NOTE: UNBALANCED IS MEASURED BETWEEN GROUND-SIGNAL-GROUND CONDUCTORS, WITH SHIELD GROUNDED.
BALANCED IS MEASURED USING GROUND-SIGNAL-SIGNAL-GROUND-SIGNAL-SIGNAL-GROUND CONFIGURATION WITH SHIELD GROUNDED.

ENVIRONMENTAL:

TEMPERATURE RATING: USA: CL2; 75°C
FLAMMABILITY RATING: USA: N.E.C. 725, CL2

ORDERING INFORMATION

2229/XXX XX DW

- XXX: NUMBER OF CONDUCTORS (SEE TABLE 1)
- XX: BLANK = STANDARD; SF = SPLICE FREE
- DW: DRAIN WIRE

"PRINTING ILLUSTRATION"

® CL2 75°C 30 AWG 3M NU

UL FILE NO: E118773

3M™ Display and Electronics Product Platform, (DEPP)
Transportation and Electronics Business Group (TEBG)
http://www.3M.com/interconnect

3M IS A TRADEMARK OF 3M COMPANY.
FOR TECHNICAL, SALES OR ORDERING INFORMATION CALL 800-225-5373

DIMENSIONS: INCHES [MM]
[MM] IS FOR REF. ONLY

REV	ECO	ISSUE DATE AND DESCRIPTION	DRFT	CHKD
A	129545	JUN 09,2026 PRODUCTION RELEASE	JNC	FJR

DESIGN REFERENCE | NEXT ASSEMBLY
ACCESS CODES
DRFT: CASTIGLIONE — DATE: MAY 02,2025 — MFG: W. OWENS — DATE: MAY 05,2025
CHKD: J. GEISSINGER — DATE: MAY 05,2025 — APPV: F. RODRIGUEZ — DATE: FEB 26,2026
DIVISION
DIVISION CODE: DEPP
DO NOT SCALE DRAWING | SCALE
TOLERANCES EXCEPT AS NOTED
INCHES: .0 ±.1; .00 ±.01; .000 ±.005; .0000 ±.0002
MILLIMETERS: 0 ±; .0 ±; .00 ±; .000 ±
THIRD ANGLE PROJECTION
INTERPRET PER ASME Y14.5 - 2018
MAX SURFACE ROUGHNESS: ☐ ALL SURFACES ☐ MARKED ONLY
ANGLES ±

3M Center, St. Paul, MN 55144

© 3M COPYRIGHT 2026
This document and the information it contains are 3M property and may not be reproduced or further distributed without 3M permission, or used or disclosed other than for 3M authorized purposes. All rights reserved.

TITLE: SHIELDED / JACKETED, FLAT CABLE, .025" 30 AWG, STRANDED, PVC

CAGE NUMBER | SIZE: D | DRAWING NO.: 78-5100-2831-5 | REV.: A
MODEL: 2229 | DET LIS: ☐ YES ☒ NO | SHT 1 OF 2

78-5100-2831-5 A
DRAWING NUMBER REVISION

3M™ SHIELDED/JACKETED, FLAT CABLE, .025", 2229 SERIES

30 AWG STRANDED, PVC, .025" PITCH

Technical Information: The technical information, guidance, and other statements contained in this document or otherwise provided by 3M are based upon records, tests, or experience that 3M believes to be reliable, but the accuracy, completeness, and representative nature of such information is not guaranteed. Such information is intended for people with knowledge and technical skills sufficient to assess and apply their own informed judgment to the information. No license under any 3M or third party intellectual property rights is granted or implied with this information.

Product Use: Many factors beyond 3M's control and uniquely within user's knowledge and control can affect the use and performance of a 3M product in a particular application. As a result, customer is solely responsible for evaluating the product and determining whether it is appropriate and suitable for customer's application, including conducting a workplace hazard assessment and reviewing all applicable regulations and standards (e.g., OSHA, ANSI, etc.). Failure to properly evaluate, select, and use a 3M product in accordance with all applicable instructions and with appropriate safety equipment, or to meet all applicable safety regulations, may result in injury, sickness, death, and/or harm to property.

Warranty, Limited Remedy, and Disclaimer: Unless a different warranty is specifically stated on the applicable 3M product packaging or product literature (in which case such warranty governs), 3M warrants that each 3M product meets the applicable 3M product specifications on the Certificate of Analysis, which is established when the product is manufactured and deemed commercially available and is provided at the time 3M ships the product. 3M MAKES NO OTHER WARRANTIES OR CONDITIONS, EXPRESS OR IMPLIED, INCLUDING, BUT NOT LIMITED TO, ANY IMPLIED WARRANTY OR CONDITION OF MERCHANTABILITY, FITNESS FOR A PARTICULAR PURPOSE, OR ANY IMPLIED WARRANTY OR CONDITION ARISING OUT OF A COURSE OF DEALING, CUSTOM, OR USAGE OF TRADE. If a 3M product does not conform to this warranty, then the sole and exclusive remedy is, at 3M's option, replacement or repair of the 3M product or refund of the purchase price.

Limitation of Liability: Except for the limited remedy stated above, and except to the extent prohibited by applicable law, 3M will not be liable for any loss or damage arising from or related to the 3M product, whether direct, indirect, special, incidental, or consequential (including, but not limited to, lost profits or business opportunity), regardless of the legal or equitable theory asserted, including, but not limited to, warranty, contract, negligence, or strict liability.

Disclaimer: For industrial use only. Not intended, labeled or packaged for consumer sale or use.

3M Company
3M™ Display and Electronics Product Platform, (DEPP)
Transportation and Electronics Business Group (TEBG)
13011 McCallen Pass, Bldg. C
Austin, TX 78753-5380
1-800-225-5373
www.3M.com/interconnect

3M™ Display and Electronics Product Platform, (DEPP)
Transportation and Electronics Business Group (TEBG)
http://www.3M.com/interconnect

3M IS A TRADEMARK OF 3M COMPANY.
FOR TECHNICAL, SALES OR ORDERING
INFORMATION CALL 800-225-5373

REV	ECO	ISSUE DATE AND DESCRIPTION	DRFT	CHKD
A	129545	JUN 09,2026 PRODUCTION RELEASE	JNC	FJR

DESIGN REFERENCE | NEXT ASSEMBLY
ACCESS CODES

DRFT	CASTIGLIONE	DATE MAY 02,2025	MFG W. OWENS DATE MAY 05,2025
CHKD	J. GEISSINGER	DATE MAY 05,2025	APPV. F. RODRIGUEZ DATE FEB 26,2026

DIVISION: DO NOT SCALE DRAWING | SCALE
DIVISION CODE: DEPP
TOLERANCES EXCEPT AS NOTED
INCHES: .0 ±.1 | .00 ±.01 | .000 ±.005 | .0000 ±.0002
MILLIMETERS: 0 ± | .0 ± | .00 ± | .000 ±
ANGLES ±
THIRD ANGLE PROJECTION
INTERPRET PER ASME Y14.5 - 2018
MAX SURFACE ROUGHNESS ☐ ALL SURFACES ☐ MARKED ONLY

3M Center St. Paul, MN 55144
© 3M COPYRIGHT 2026
This document and the information it contains are 3M property and may not be reproduced or further distributed without 3M permission, or used or disclosed other than for 3M authorized purposes. All rights reserved.

TITLE: SHIELDED / JACKETED, FLAT CABLE, .025" 30 AWG, STRANDED, PVC

CAGE NUMBER	SIZE	DRAWING NO.	REV.
	D	78-5100-2831-5	A

MODEL 2229 | DET. LISTS ☐ YES ☒ NO | SHT 2 OF 2

78-5100-2831-5 DRAWING NUMBER | A REVISION