SIGN	DATE	DESCRIPTION	APPROVER
1	03/29`12	Add is cULus	Chen Bo
2	03/29`12	The dimension D & E are added	Chen Bo
3	03/29`12	The dimension is changed from 1.30mm to 1.3mm	Chen Bo
4	03/29`12	The dimension is changed from 2.60mm to 2.6mm	Chen Bo

THIS IS CAD DRAWING, DO NOT REVISE MANUALLY!!!

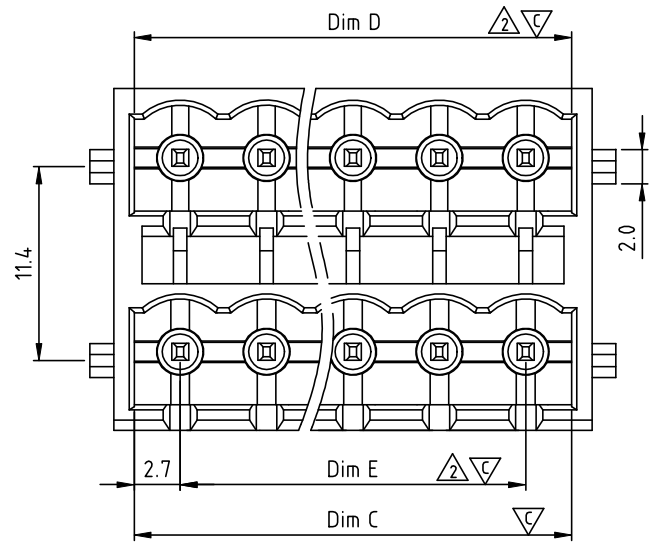

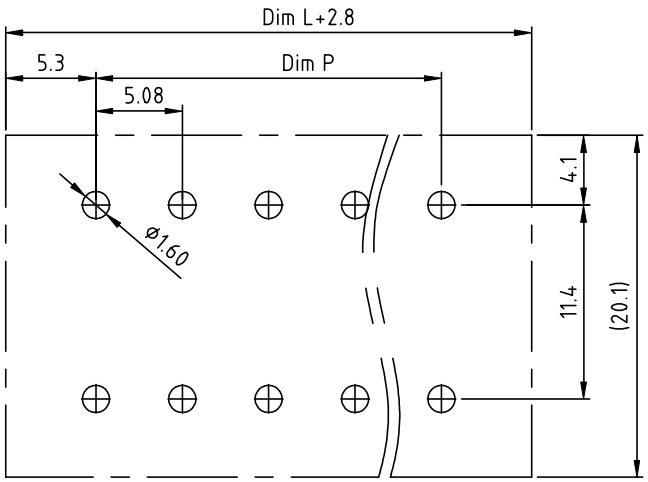

PCB Layout

Material:
- Item a Terminal(housing): Thermoplastic (UL94V-0)
- Item b Terminal(cover): Thermoplastic (UL94V-0)
- Item c Male contact pin : Copper Tin plated

Electrical:	cULus
Voltage rating:	300V
Current rating:	12A
Withstanding Voltage:	1.6KV
Operating temperature:	-40°C to +115°C
Soldering temperature:	250°C ±10°C/5 Sec
1 Safety Approval:	c UL us
Critical dimension:	C

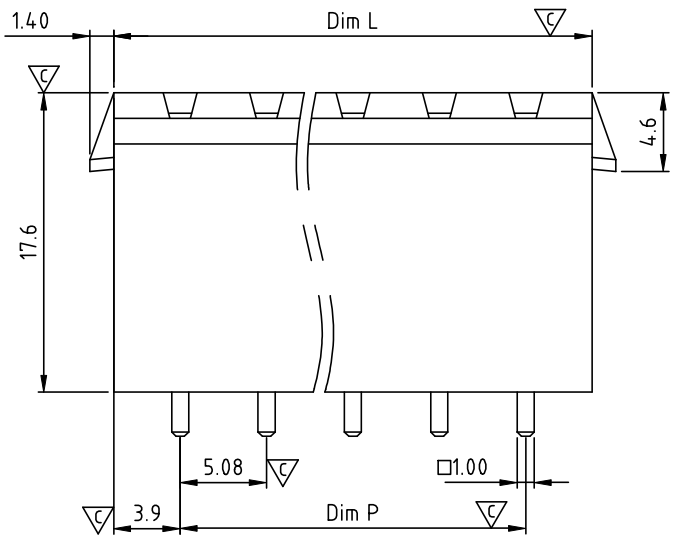

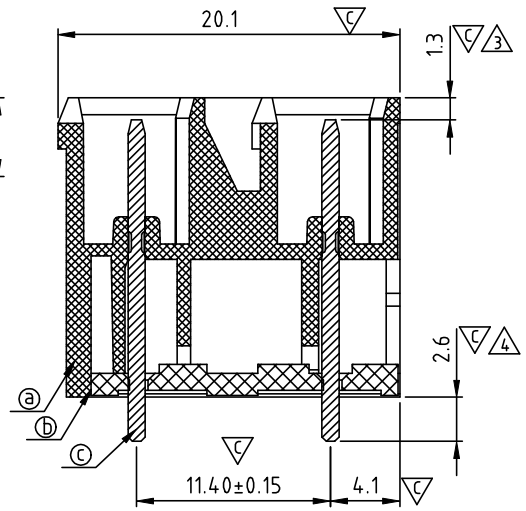

KE xx 5 3 x 2 xxxx G

No. OF POLES
04: 2×2 POLES
06: 2×3 POLES
48: 2×24 POLES

G RoHS compliant (lead<4%) In copper Alloy

COLOR
0 Black (RAL9005)
2 Red (RAL3001/D)
3 Orange(RAL2011/P)
4 Yellow(RAL1018/A)
5 Green(RAL6018/T)
6 Blue (RAL5015/A)
8 Grey(RAL7035/D)
9 White(RAL1102)
C Green(RAL6018/U)

0000: "@" Logo (Standard)
000A: "ANYTEK" Mark
Any special item by customer requst. please contact sales department.

Poles	Dim L	Dim P	Dim C	Dim D	Dim E
2×2-2×6p	±0.15	±0.15	+0.05 −0.05	+0.05 −0.05	±0.15
2×7-2×12p	±0.25	±0.25	+0.10 −0.05	+0.10 −0.05	±0.25
2×13-2×18p	±0.35	±0.35	+0.20 −0.05	+0.20 −0.05	±0.35
2×19-2×24p	±0.40	±0.40	+0.25 −0.10	+0.25 −0.10	±0.40

N = Number of poles
Dim L=N×5.08+2.72
Dim P=(N-1)x5.08
Dim C=(N-1)x5.08+5.4
Dim D=(N-1)x5.08+5.4
Dim E=(N-1)x5.08

ANYTEK

CUSTOMER COPY

ALL RIGHTS RESERVED. REPRODUCTION OR ISSUE TO THIRD PARTIES IN ANY FORM WHATEVER IS NOT PERMITTED WITHOUT WRITTEN AUTHORITY FROM THE PROPRIETOR. PROPERTY OF ANYTEK TECHNOLOGY CO., LTD

TITLE	KE 5.08mm With latch holder Series (Vertical) DIP TYPE				
PART NO.	KExx53x2xxxxG			DWG NO.	8KE0212
APPROVED	CHECKED	DESIGNED	DRAWN	CUST NO.	
		Chen Bo 03/29`12	Chen Bo 03/29`12	UNIT: mm	
				SCALE: NONE	
				SHEET: 01/01	REV.: C

Tolerance	
X.	±0.50
X.X	±0.30
X.XX	±0.10
X°	±1°