Bellows suction cups (round)

SFB1 15 EPDM-45 G1/8-IG

Część nr..:10.01.06.04401

https://www.schmalz.com/10.01.06.04401

Bellows suction cup (round) for very uneven workpieces flexible workpieces



- Size: 15
- Suction cup material: EPDM
- Material hardness [Shore A]: 45 Shore A

Dane projektowe

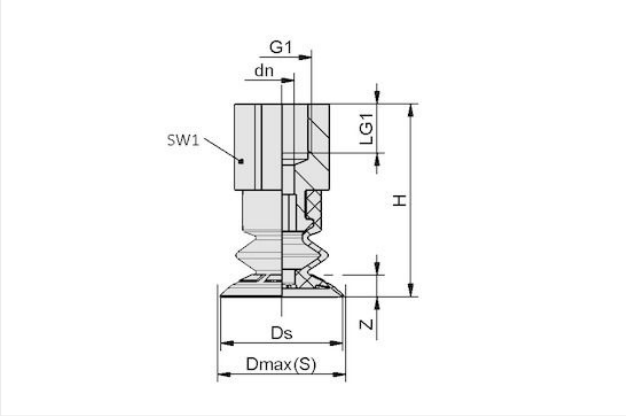

Atrybut	Wartość
Dmax(S)	16 mm
Ds	15 mm
d2	4,70 mm
dn	4,10 mm
G1	G1/8-IG
LG1	8 mm
H	30 mm
SW1	14 mm
Z (Stroke)	4 mm

Dane techniczne

Atrybut	Wartość
Suction force (-600mbar)	1 N
Volume	0,80 cm³
Size	15
Number of folds	1,50
Suction cup material	EPDM
Material hardness [Shore A]	45 Shore A
Product family	SFB1

Kontakt z firmą Schmalz
Schmalz Sp.z.o.o. | ul. Fabianowska 131/A1, 62-052 Komorniki, Poland | +48 61 628 67 70 | schmalz@schmalz.pl

Bellows suction cups (round)

SFB1 15 EPDM-45 G1/8-IG

Część nr..:10.01.06.04401

https://www.schmalz.com/10.01.06.04401

Części zamienne



SFB1 15 EPDM-45 SC040

Część nr..:10.01.06.04374

Size: 15
Suction cup material: EPDM
Material hardness [Shore A]: 45 Shore A
Number of folds: 1,5



SC 040 G1/8-IG

Część nr..:10.01.06.02482

Connection geometry: 040
Connection: G1/8"-F
Length L1: 20,7 mm
Fitting length: 14 mm
Nominal diameter dn: 4,1 mm