TRIDONIC

Driver LCO 1800W 350–1700mA 500V 3CH NF pD+ DM PRE

premium NFC outdoor series

Product description

_ Premium D4i and DMX outdoor LED driver with IP66 protection, UL Dry/Damp/Wet Location
_ Universal input voltage range (220–480 V AC,) and wide output current adjustable via NFC and DALI
_ High reliability: up to 100,000 h nominal lifetime, 7 year guarantee (conditions at https://www.tridonic.com/en/int/services/manufacturer-guarantee-conditions)
_ Exceptional energy efficiency up to 97%
_ Superior surge protection: 20 kV (L-N), 20 kV (L/N-PE), and integrated ESD protection, adapting to harsh outdoor environments
_ 3-channel output design with wide operating window, compatible with various LED module combinations and luminaire operating points
_ Strobe effects up to 44fps: Supports a continuous sequence as fast as 22.7ms-ON and 22.7ms-OFF (fps means frame per second)

Interfaces

_ NFC wireless programming via NFC Programming Utility Tool
_ DALI/DMX control interfaces automatic detection
_ Auxiliary 24 V DC supply for powering controllers, sensors or external devices
_ Programmable dimming curves (linear default, logarithmic optional) and output current limits via NFC/DALI
_ Constant light output (CLO) and NTC temperature sensing compatibility
_ DMX failure mode configuration and sync mode setting (1 or 3 logical addresses)

Benefits

_ Operating window for maximum compatibility
_ Best energy savings thanks to high efficiency
_ Robust thermal behavior to ease design-in
_ Up to 20 KV surge protection
_ NFC-enabled on-site configuration without disassembling luminaires
_ For class I luminaires

Typical applications

_ Sport, stadium and area lighting

Website

http://www.tridonic.com/28006364

TRIDONIC

Driver LCO 1800W 350–1700mA 500V 3CH NF pD+ DM PRE

premium NFC outdoor series

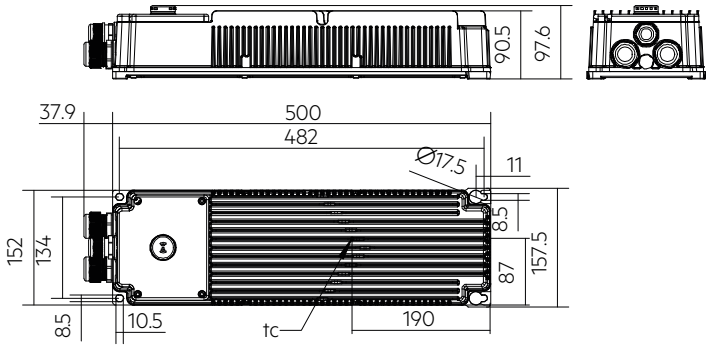

Ordering data

Type	Article number	Packaging, carton	Packaging, pallet	Weight per pc.
LCO 1800/350-1700/500 3CH NF pD+ DM PRE	**28006364**	1 pc(s).	25 pc(s).	7.5 kg

Technical data

Rated supply voltage	220 – 480 V
AC voltage range	180 – 528 V
Mains frequency	50 / 60 Hz
Typ. rated current (at 220 V, 50 Hz, full load)	8,660 mA
Typ. rated current (at 277 V, 50 Hz, full load)	6,810 mA
Typ. rated current (at 400 V, 50 Hz, full load)	4,680 mA
Typ. rated current (at 480 V, 50 Hz, full load)	3,950 mA
Leakage current (at 230 V, 50 Hz, full load) ①	< 700 µA
Max. input power	1,902 W
Typ. efficiency (at 220 V, 50 Hz, full load)	95.1 %
Typ. efficiency (at 277 V, 50 Hz, full load)	96 %
Typ. efficiency (at 400 V, 50 Hz, full load)	96.6 %
Typ. efficiency (at 480 V, 50 Hz, full load)	97 %
λ over full operating range (max.)	0.99
λ over full operating range (min.)	0.45C
Typ. power consumption on stand-by ②③	< 0.5 W
Typ. input current in no-load operation	217 mA
Typ. input power in no-load operation	9.42 W
In-rush current (peak / duration at 220 V)	7.8 A / 15.8 µs
In-rush current (peak / duration at 277 V)	9.6 A / 16.5 µs
In-rush current (peak / duration at 400 V)	13.6 A / 17.2 µs
In-rush current (peak / duration at 480 V)	15.8 A / 18.4 µs
THD (at 230 V, 50 Hz, full load)	< 6 %
Starting time (at 230 V, 50 Hz, full load)	< 1 s
Turn off time (at 230 V, 50 Hz, full load)	< 0.6 s
Hold time (power failure, full load)	< 400 ms
Output current tolerance	± 3 %
Max. output current peak (non-repetitive)	1,870 mA
Output LF current ripple (< 120 Hz) ④	± 1 %
Output P_ST_LM (at full load) ⑤	< 0.2
Output SVM (at full load)	< 0.18
Max. output voltage (U-OUT)	550 V
Dimming range DALI mode	0.5 – 100 % (typ. 3 mA)
Dimming range DMX mode	0.1 – 100 % (typ. 2 mA)
Mains surge capability (between L - N)	20 kV
Mains surge capability (between L/N - PE)	20 kV
Surge voltage at output side (against PE)	< 3 kV
Type of protection	IP66
Impact protection degree	IK08
Lifetime	up to 100,000 h
Guarantee (conditions at www.tridonic.com)	7 Year(s)
Dimensions L x W x H	537.9 x 157.5 x 97.6 mm

Approval marks

IP66 RoHS

Specific technical data

Type	Output current	Min. output voltage	Max. output voltage	Max. output power	Typ. power consumption (at 220 V, full load)	Typ. current consumption (at 220 V, full load)	Typ. power consumption (at 277 V, 50 Hz, full	Typ. current consumption (at 277 V, 50 Hz, full	Typ. power consumption (at 400 V, full load)	Typ. current consumption (at 400 V, full load)	Typ. power consumption (at 480 V, full load)	Typ. current consumption (at 480 V, full load)	tc point max.
LCO 1800/350-1700/500 3CH NF pD+ DM PRE	350 mA	212 V	500 V	175 W	575.8 W	2,615 mA	574.2 W	2,098 mA	572.3 W	1,557 mA	571.5 W	1,404 mA	85 °C
LCO 1800/350-1700/500 3CH NF pD+ DM PRE	500 mA	212 V	500 V	250 W	813.4 W	3,691 mA	809.8 W	2,928 mA	808.4 W	2,098 mA	807.5 W	1,841 mA	85 °C
LCO 1800/350-1700/500 3CH NF pD+ DM PRE	1,000 mA	212 V	500 V	500 W	1,568.0 W	7,124 mA	1,556.0 W	5,614 mA	1,548.0 W	3,872 mA	1,545.0 W	3,262 mA	85 °C
LCO 1800/350-1700/500 3CH NF pD+ DM PRE	1,200 mA	212 V	500 V	600 W	1,886.0 W	8,588 mA	1,871.0 W	6,749 mA	1,859.0 W	4,671 mA	1,856.0 W	3,919 mA	85 °C
LCO 1800/350-1700/500 3CH NF pD+ DM PRE	1,500 mA	212 V	400 V	600 W	1,879.0 W	8,546 mA	1,864.0 W	6,731 mA	1,855.0 W	2,645 mA	1,850.0 W	3,928 mA	85 °C
LCO 1800/350-1700/500 3CH NF pD+ DM PRE	1,700 mA	212 V	353 V	600 W	1,872.0 W	8,535 mA	1,858.0 W	6,703 mA	1,847.0 W	4,625 mA	1,843.0 W	3,885 mA	85 °C

① Grounding effectively
② No-load on AUX power supply.
③ Test result at 230 V, 50 Hz.
④ It is a typical value.
⑤ If dimming level <20%, PstLM <0.7

ACU Z18 COVER 139x121mm D4i

Accessory

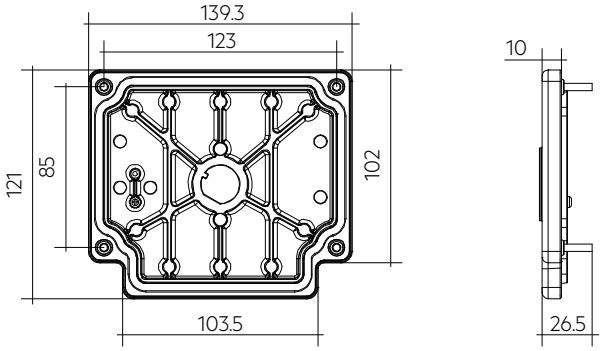

Product description

- This DALI D4i cover upgrades standard stadium high power stadium driver with Zhaga Book 18 interface
- Enable direct D4i device connection to driver via Zhaga Book 18 socket
- Plug-and-play solution integrates D4i devices with driver seamlessly

Website
http://www.tridonic.com/28006847

Ordering data

Type	Article number	Packaging, outer box	Weight per pc.
ACU Z18 COVER 139x121mm D4i	**28006847**	20 pc(s).	0.22 kg

ACU Z18 G2 Set

Accessory

ACU Z18 REP 4PIN G2

ACU Z18 CAP IP66 G2

ACU Z18 REP 4PIN + ACU Z18 CAP IP66

Product description

- Set consisting of receptacle, lock washer and mounting nut (ACU Z18 REP 4PIN G2)
- Designed for street lighting control
- Double connector terminal for an easy through wiring to two DALI nodes simultaneously
- Colored dots for a quick and failure free assembly (matching with LCO PRE3 and LCO 2 channel outdoor driver terminals)
- Compliant with Zhaga Book 18 Ed. 3
- UL UV-f1 rated for outdoor use
- IK09 high impact resistant

Housing properties

- Colour: dark grey (RAL 7043)
- Casing receptacle: PBT
- Type of protection IP66

Note

- Please consider correct placing of the gasket lip in the gasket seat. For details refer to data sheet chapter „Gasket varification“

Interfaces

- Supplies Zhaga Book 18 Ed. 3 contact system

Website
http://www.tridonic.com/28005366

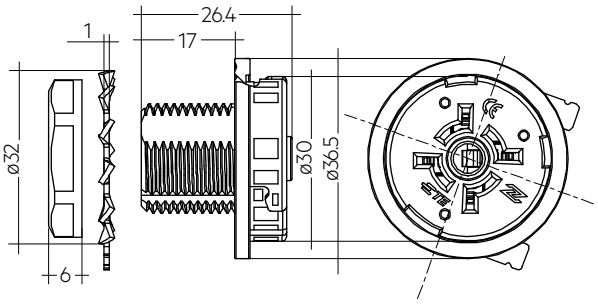

ACU Z18 REP 4PIN G2

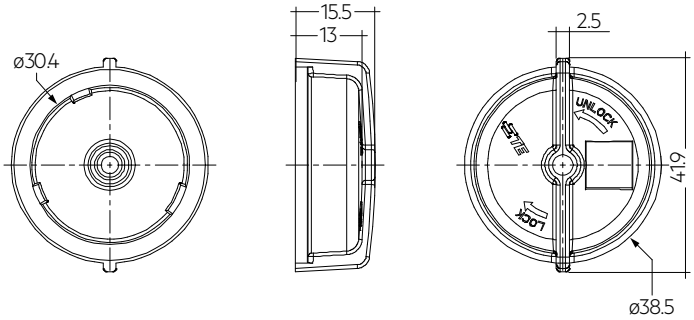

ACU Z18 CAP IP66 G2

Ordering data

Type	Article number	Packaging, carton	Packaging, bag	Weight per pc.
ACU Z18 REP 4PIN G2	**28005366**	200 pc(s).	–	0.027 kg
ACU Z18 CAP IP66 G2	**28005374**	200 pc(s).	100 pieces	0.009 kg

Approval marks

CE RoHS

1. Standards

EN 55015
EN 61000-3-2
EN 61000-3-3
EN 61347-1
EN 61347-2-13
EN 61547
EN 62384
EN 62386-101 (according to DALI standard V2)
EN 62386-102
EN 62386-207
EN 61000-4-4
EN 61000-4-5
EN 62386 part 150
EN 62386 part 250
EN 62386 part 251
EN 62386 part 252
EN 62386 part 253
ANSI E1.11 DMX512A
ANSI E1.20 RDM – Remote Device Management
ANSI E1.37-1 Additional message sets for dimmer
EN 61000-4-2
EN 61000-4-3
EN 61000-4-4
EN 61000-4-8
EN 61000-4-11
UL8750
CSA C22.2
FCC Part 15,Class B

2. Thermal details and lifetime

2.1 Expected lifetime

Expected lifetime 220 V

Type	Output current	ta	25 °C	30 °C	35 °C	40 °C	45 °C	50 °C
LCO 1800/350-1700/500 3CH NF pD+ DM PRE	350 – 1,000 mA	tc	60 °C	65 °C	70 °C	75 °C	80 °C	85 °C
		Lifetime	130,000 h	130,000 h	103,000 h	73,000 h	51,000 h	36,000 h
	1,000 – 1,700 mA	tc	67 °C	72 °C	77 °C	82 °C	–	–
		Lifetime	127,000 h	90,000 h	63,000 h	45,000 h	–	–

Expected lifetime 277 V

Type	Output current	ta	25 °C	30 °C	35 °C	40 °C	45 °C	50 °C
LCO 1800/350-1700/500 3CH NF pD+ DM PRE	350 – 1,000 mA	tc	57 °C	62 °C	67 °C	72 °C	78 °C	83 °C
		Lifetime	130,000 h	130,000 h	130,000 h	97,000 h	64,000 h	45,000 h
	1,000 – 1,700 mA	tc	62 °C	67 °C	72 °C	77 °C	83 °C	–
		Lifetime	130,000 h	130,000 h	97,000 h	68,000 h	45,000 h	–

Expected lifetime 400 V

Type	Output current	ta	25 °C	30 °C	35 °C	40 °C	45 °C	50 °C
LCO 1800/350-1700/500 3CH NF pD+ DM PRE	350 – 1,000 mA	tc	52 °C	57 °C	62 °C	67 °C	73 °C	78 °C
		Lifetime	130,000 h	130,000 h	130,000 h	130,000 h	95,000 h	67,000 h
	1,000 – 1,700 mA	tc	57 °C	62 °C	67 °C	72 °C	78 °C	83 °C
		Lifetime	130,000 h	130,000 h	130,000 h	102,000 h	67,000 h	47,000 h

Expected lifetime 480 V

Type	Output current	ta	25 °C	30 °C	35 °C	40 °C	45 °C	50 °C
LCO 1800/350-1700/500 3CH NF pD+ DM PRE	350 – 1,000 mA	tc	50 °C	55 °C	60 °C	65 °C	71 °C	76 °C
		Lifetime	130,000 h	130,000 h	130,000 h	130,000 h	113,000 h	79,000 h
	1,000 – 1,700 mA	tc	55 °C	60 °C	65 °C	70 °C	76 °C	81 °C
		Lifetime	130,000 h	130,000 h	130,000 h	121,000 h	79,000 h	56,000 h

The LED driver is designed for a lifetime stated above under reference conditions and with a failure probability of less than 10 %.

The relation of tc to ta temperature depends also on the luminaire design.
If the measured tc temperature is approx. 5 K below tc max., ta temperature should be checked and eventually critical components (e.g. ELCAP) measured.
Detailed information on request.

3. Installation / wiring

3.1 Circuit diagram

Three channels used individually - separate LED module on each channel

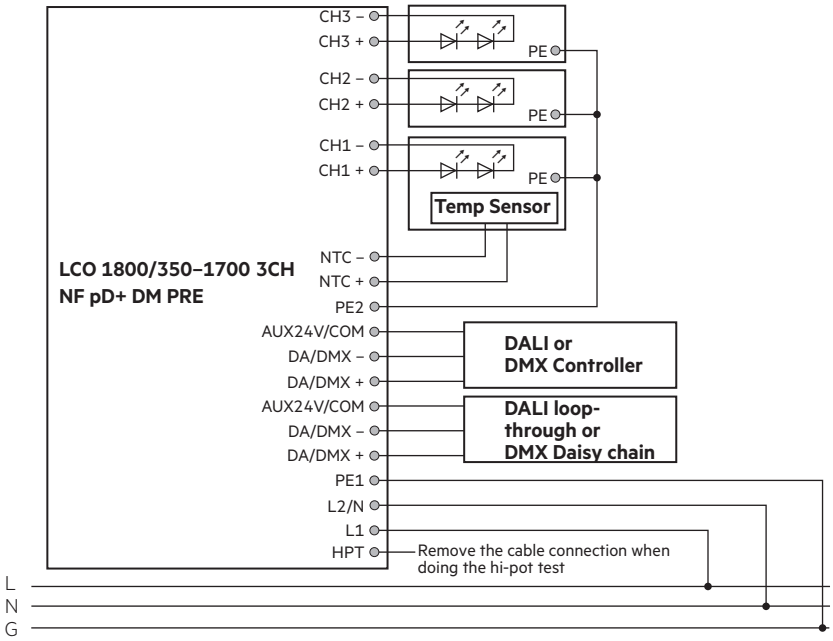

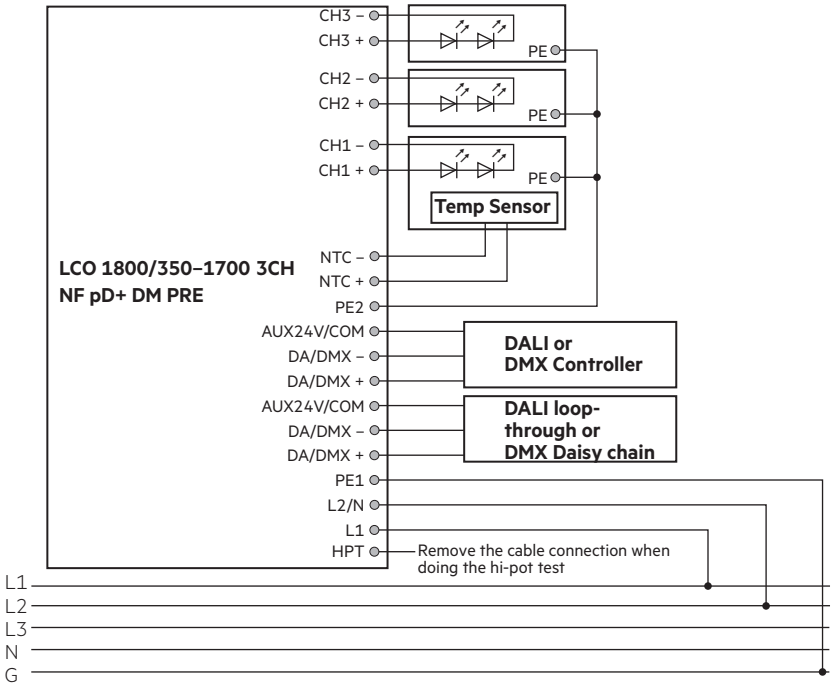

Three channels combined into one - one LED module using power of all 3 channels

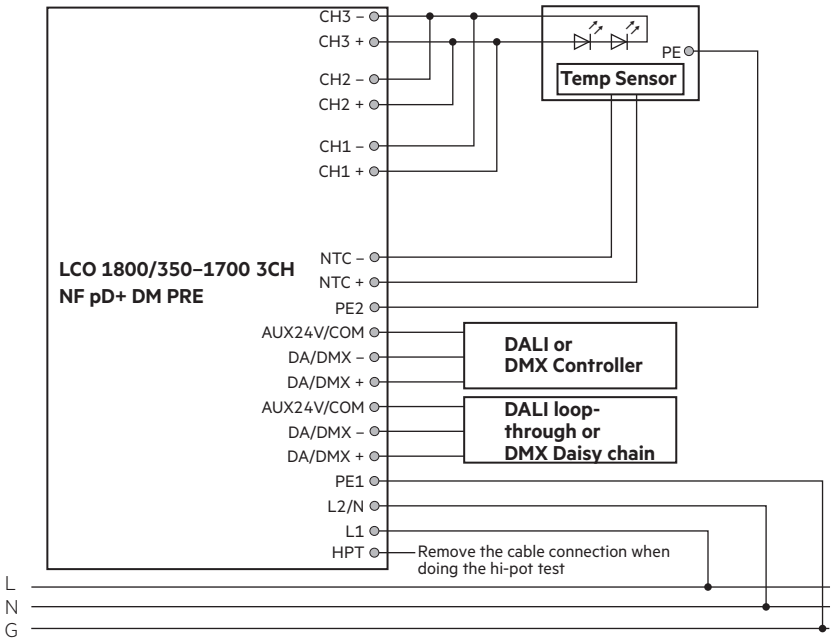

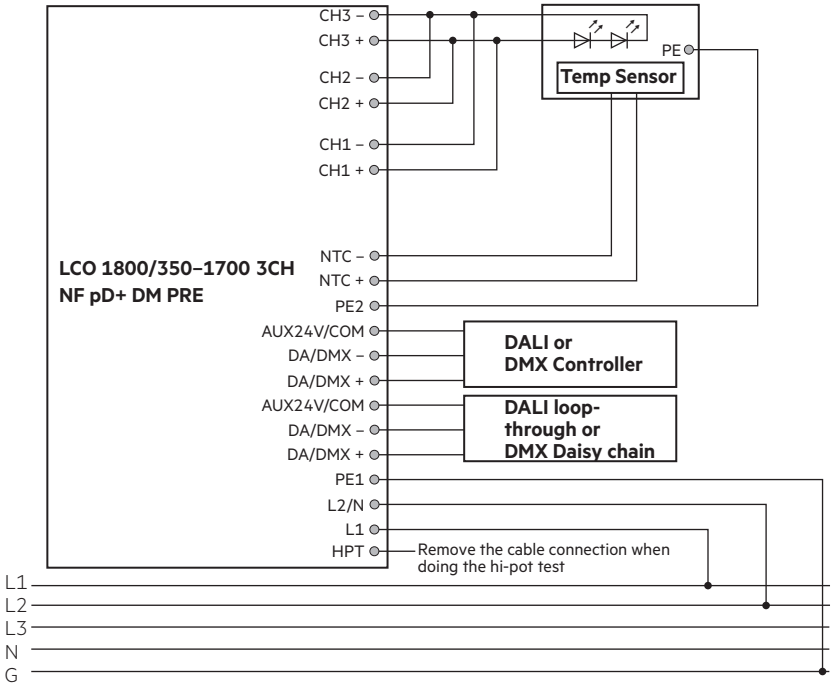

If multiple LED modules are used in parallel, the consistency of forward voltage between LED modules is mandatory. Different LED modules should not be used.

Using DMX interface allows to sync all three channels to one address. This can be done via NFC programming utility and is recommended for this application. Using DALI interface does not offer this option and it is required to send out DALI dimming commands to all three addresses the same time. To fulfill this, make sure sending GROUP commands.. Please consider turning off driver internal DALI power supply if not needed.

3.2 Connection

Input				Dimming			Output					
HPT	L1	L2/N	PE1	DA/DMX+	DA/DMX–	AUX24V/COM	PE2	NTC+	NTC–	CH1+/–	CH2+/–	CH3+/–
green/yellow	gray	gray	green/yellow	gray	gray	gray	green/yellow	gray	gray	gray	gray	gray

For connection of the device, only suitable spring terminals may be used. Screw terminals may only be used if the screw only touches untinned parts of the lead.

Section	Type	Wire Cross Section		Cable Diameter
Input	M25	1.5–2.5 mm²	15–12 AWG	13–18 mm
Output	M25	1.5–2.5 mm²	15–12 AWG	13–18 mm
Interfaces	M20	1.0–2.5 mm	18–12 AWG	6–12 mm

3.3 Wiring instructions

- All connections must be kept as short as possible to ensure good EMI behaviour
- Mains leads should be kept apart from LED driver and other leads (ideally 5 – 10 cm distance)
- Secondary switching is not permitted.
- Incorrect wiring can damage LED modules.
- To avoid damage of the Driver, the wiring must be protected against short circuits to earth (sharp edged metal parts, metal cable clips, louver, etc.).

3.4 Installation instructions

The switching of LEDs on secondary side is not permitted.

3.5 Fixing conditions

Acidfree, oilfree, fatfree. It is not allowed to exceed the maximum ambient temperature (ta) stated on the device. Minimum distances stated below are recommendations and depend on the actual luminaire. Is not suitable for fixing in corner. Terminals according to EN 60998-2-1 or EN 60998-2-2 are required.

The LED driver offers a type of protection of IP66.

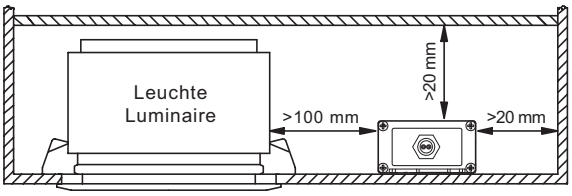

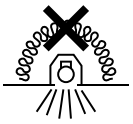

Device not suitable for covering with thermally insulating material according to IEC 60598-1 Ed.9

3.6 Earth connection

The earth connection is conducted as protection earth (PE). If the LED Driver will be earthed, protection earth (PE) has to be used.
Earth connection is recommended to improve following behaviour:
- Electromagnetic interferences (EMI)
- Transmission of mains transients to the LED output

In general it is recommended to earth the LED driver if the LED module is mounted on earthed luminaire parts respectively heat sinks and thereby representing a high capacity against earth.

3.7 IP Protection

IP66 provides protection against dust and temporary water immersion.
Due to environmental impacts (UV radiation, bird dropping, freezing...) the IP protection level may be impaired over time. To avoid this, it is required to apply means reducing these impacts to a minimum, e.g. mounting of the device in an additional enclosure.

Further details please see document "Protection classes and protective measures for Outdoor devices" in the general topics section in the download area of our homepage.

4. Electrical values

4.1 Operating window

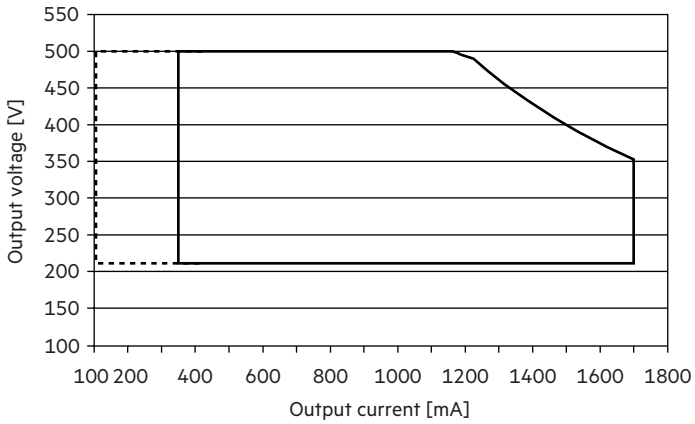

Operating window 100 %
Operating window dimmed

Make sure that the LED driver is operated within the given window under all operating conditions. Special attention needs to be paid at dimming as the forward voltage of the connected LED modules varies with the dimming level, due to the implemented amplitude dimming technology. Coming below the specified minimum output voltage of the LED driver may cause the device to shut-down.

4.2.1 Efiiciency vs Load 220V:

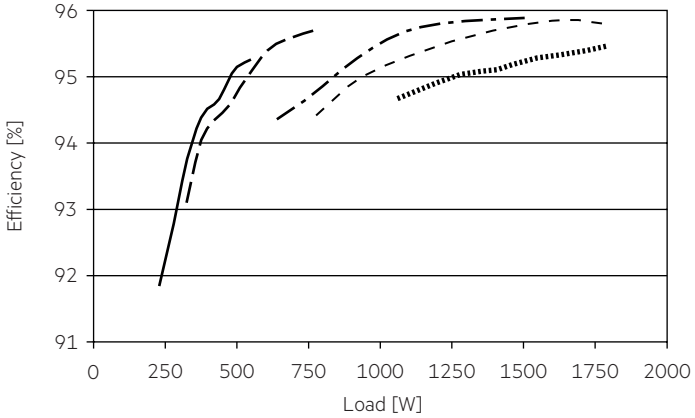

4.2.2 Efiiciency vs Load 277V:

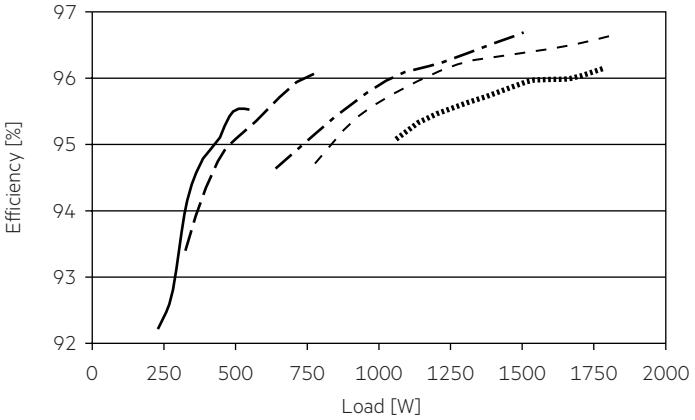

4.2.3 Efiiciency vs Load 400V:

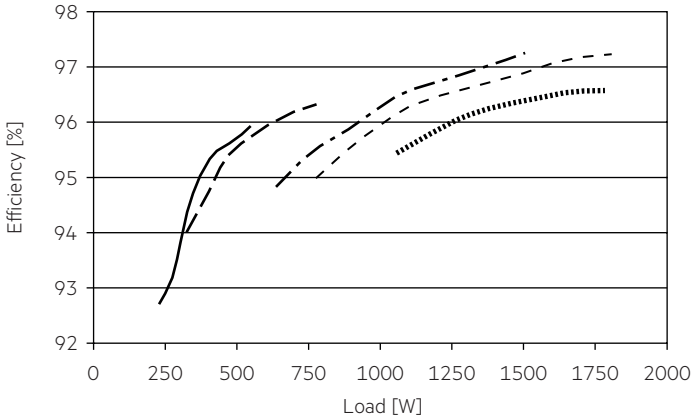

4.2.4 Efiiciency vs Load 480V:

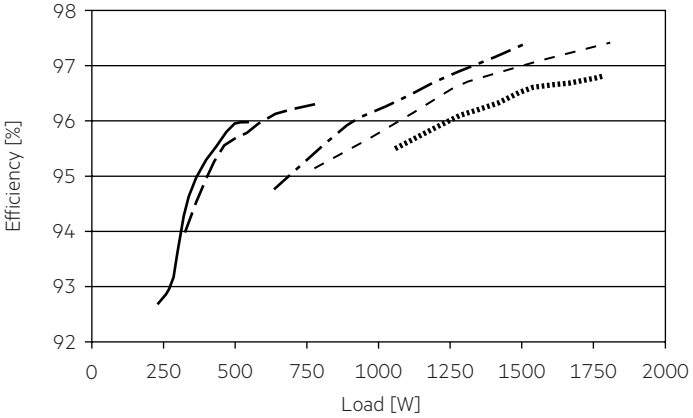

350 mA
500 mA
1000 mA
1200 mA
1700 mA

4.3.1 Power factor vs load 220V:

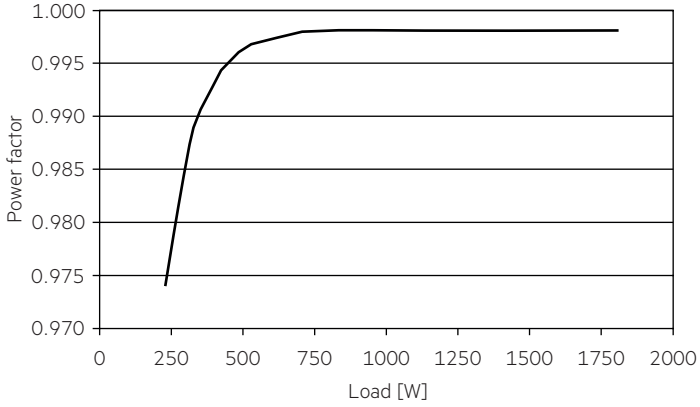

4.4.1 THD vs load 220V:

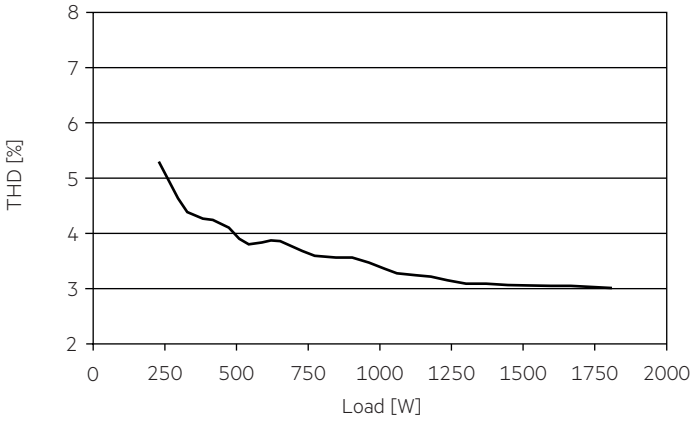

4.3.2 Power factor vs load 277V:

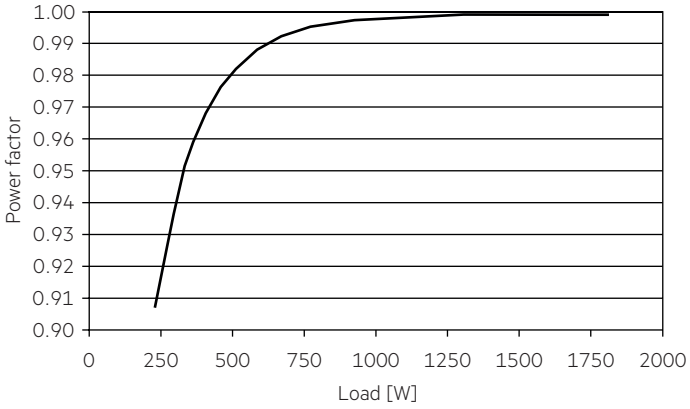

4.4.2 THD vs load 277V:

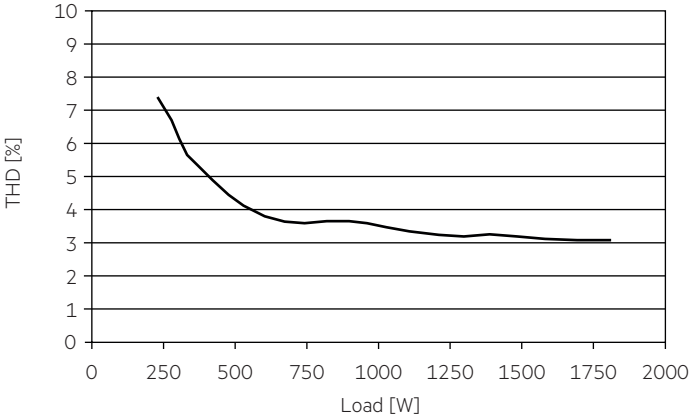

4.3.3 Power factor vs load 400V:

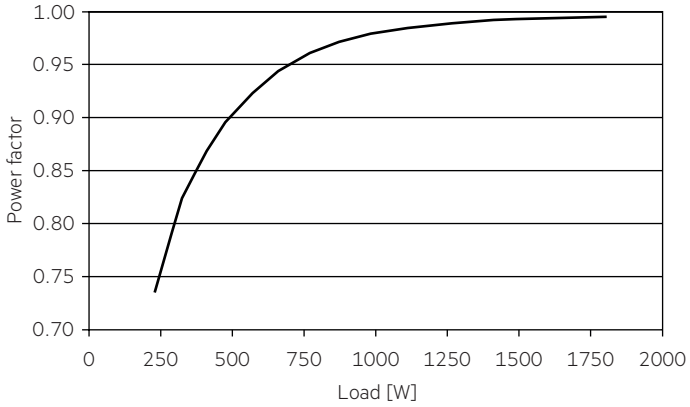

4.4.3 THD vs load 400V:

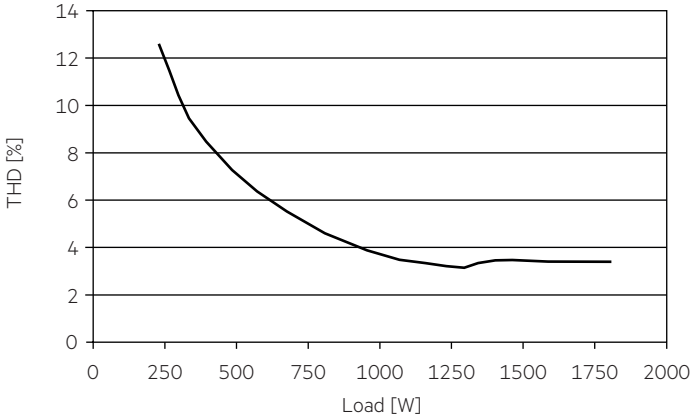

4.3.4 Power factor vs load 480V:

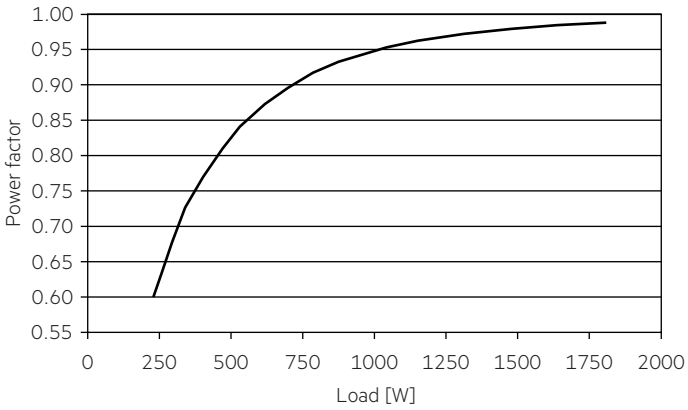

4.4.4 THD vs load 480V:

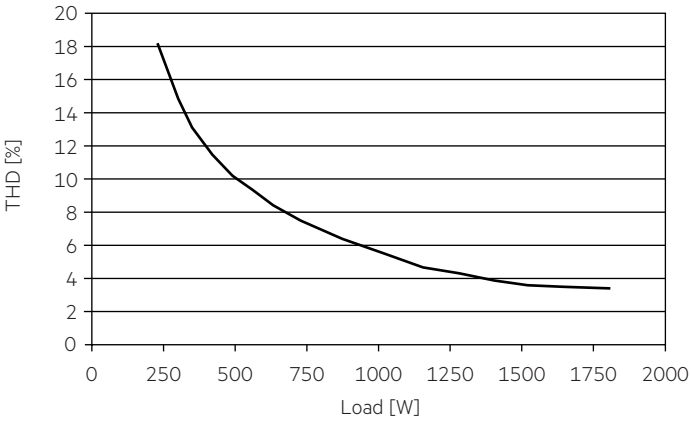

4.5 Maximum loading of automatic circuit breakers in relation to inrush current

220 V:

Automatic circuit breaker type	C10	C13	C16	C20	B10	B13	B16	B20	Inrush current	
Installation Ø	1.5 mm² / AWG16	1.5 mm² / AWG16	2.5 mm² / AWG14	2.5 mm² / AWG14	1.5 mm² / AWG16	1.5 mm² / AWG16	2.5 mm² / AWG14	2.5 mm² / AWG14	I_{max}	time
LCO 1800/350-1700/500 3CH NF pD+ DM PRE	0	1	1	1	0	0	1	1	7.8 A	15.8 µs

277 V:

Automatic circuit breaker type	C10	C13	C16	C20	B10	B13	B16	B20	Inrush current	
Installation Ø	1.5 mm² / AWG16	1.5 mm² / AWG16	2.5 mm² / AWG14	2.5 mm² / AWG14	1.5 mm² / AWG16	1.5 mm² / AWG16	2.5 mm² / AWG14	2.5 mm² / AWG14	I_{max}	time
LCO 1800/350-1700/500 3CH NF pD+ DM PRE	1	1	1	2	0	1	1	1	9.6 A	16.5 µs

400 V (operation between two phases):

Automatic circuit breaker type	C10	C13	C16	C20	B10	B13	B16	B20	Inrush current	
Installation Ø	1.5 mm² / AWG16	1.5 mm² / AWG16	2.5 mm² / AWG14	2.5 mm² / AWG14	1.5 mm² / AWG16	1.5 mm² / AWG16	2.5 mm² / AWG14	2.5 mm² / AWG14	I_{max}	time
LCO 1800/350-1700/500 3CH NF pD+ DM PRE	0	1	1	1	0	0	1	1	13.6 A	17.2 µs

480 V (operation between two phases):

Automatic circuit breaker type	C10	C13	C16	C20	B10	B13	B16	B20	Inrush current	
Installation Ø	1.5 mm² / AWG16	1.5 mm² / AWG16	2.5 mm² / AWG14	2.5 mm² / AWG14	1.5 mm² / AWG16	1.5 mm² / AWG16	2.5 mm² / AWG14	2.5 mm² / AWG14	I_{max}	time
LCO 1800/350-1700/500 3CH NF pD+ DM PRE	1	1	1	2	0	1	1	1	15.8 A	18.4 µs

These are max. values calculated out of inrush current! Please consider not to exceed the maximum rated continuous current of the circuit breaker.
Calculation uses typical values from ABB series S200 as a reference.
Actual values may differ due to used circuit breaker types and installation environment.

4.6 Harmonic distortion in the mains supply

at 220 V / 277 V / 400 V / 480 V and full load in %:

	THD	3.	5.	7.	9.	11.
LCO 1800/350-1700/500 3CH NF pD+ DM PRE	< 20	< 28.6	< 10	< 7	< 5	< 3

4.7 Dimming DALI mode

Dimming range 0.5 % to 100 %
Digital control with:
- DALI signal:
  16 bit Manchester Code Speed 0.5 % to 100 % in 0.2 s
  Programmable parameter:
  Minimum dimming level Maximum dimming level
  Default minimum = 0.5 % Programmable range 0.5 % ≤ MIN ≤ 100 %
  Default maximum = 100 % Programmable range 100 % ≥ MAX ≥ 0.5 %

Dimming curve is adapted to the eye sensitiveness.
Dimming is realized by amplitude dimming.

Phsyical minimal current is 0.5 % of max current of the driver.

4.8 Dimming DMX/RDM mode

Dimming range 0.1 % to 100 %
Digital control with:
- DMX/RDM signal:
  Programmable parameter:
  Minimum dimming level Maximum dimming level
  Default minimum = 0.1 % Programmable range 0.1 % ≤ MIN ≤ 100 %
  Default maximum = 100 % Programmable range 100 % ≥ MAX ≥ 0.1 %

Dimming curve is adapted to the eye sensitiveness.
Dimming is realized by amplitude dimming.

Phsyical minimal current is 0.1 % of max current of the driver.

4.9 Dimming characteristics

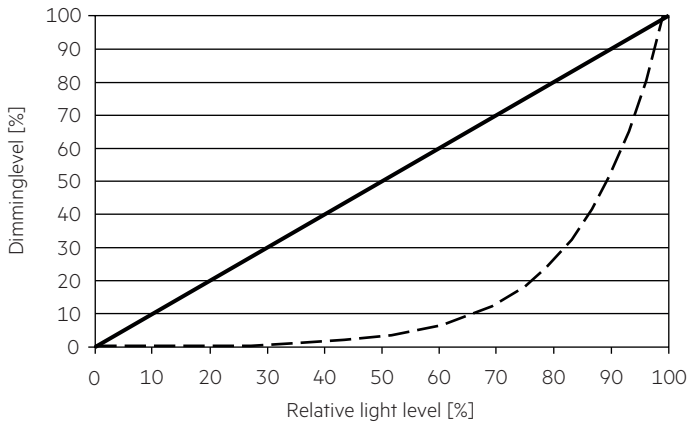

Lineare Dimmkurve (Standard)
Logarithmische Dimmkurve

Dimming curves in both of DALI mode and DMX mode are linear and logarithm curve selectable, in DALI mode the default dimming curve is logarithm, in DMX mode the default curve is the linear.

4.10 Insulation between terminals

Insulation	Mains	LED+/LED-	DA/DMX+/-	AUX24V/COM	NTC+/-	PE
Mains	–	–	double	double	–	basic
LED+/LED-	–	–	double	double	–	basic
DA/DMX+/-	double	double	–	–	double	basic
AUX24V/COM	double	double	–	–	double	basic
NTC+/-	–	–	double	double	–	basic
PE	basic	basic	basic	basic	basic	–

basic ... represents basic insulation.
double ... represents double or reinforced insulation.

5. Software / Programming / Interfaces

5.1 Software / programming

With appropriate software and interface different functions can be activated and various parameters can be configured in the LED driver.
The Driver supports the following software and interfaces:

Software / hardware for configuration:
- NFC Programming tool

Interfaces for data transfer:
- NFC
- DALI
- DMX/RDM

5.2 Nearfield communication (NFC)

The NFC Interface allows wireless communication with the LED driver.
This interface offers the option to write configuration and to read configuration, errors and events with the companionSUITE.
A correct communication between the LED driver and the NFC antenna can only be guaranteed if the Driver is directly placed on the antenna.
Any material placed between the LED driver and the NFC antenna can cause a deterioration of the communication quality.
Driver has to be removed from the NFC antenna before powering it the first time to ensure proper transfer of the programming data.
We recommend the use of following NFC antennas:
www.tridonic.com/nfc-readers

NFC is compliant with ISO/IEC 15693 standard.

Changing parameters via NFC shall be done by qualified engineers only.

6. Functions

Funktionen	NFC
Luminaire data	⊙
OEM identification	⊙
OEM GTIN	⊙
Integrated DALI bus voltage (D4i)	⊙
Output current configuration	⊙
CLO	⊙
NTC	⊙
DALI default parameters	⊙
Dimming curve selection 1) Linear dimming curve 2) Logarithmic dimming curve (default)	⊙
DMX start address	⊙
Min Dimming level (DMX not able for each channel)	⊙
DMX Failure mode (DMX failure mode disable and enable, if it is enable Failure Timeout and Failure level for each channel configuratable)	⊙
Sync mode setting (one logical address or three logical addresses)	⊙

For a detailed function description refer to the manual in the download section.

6.1 Integrated DALI bus power supply

This function complies to DiiA specification DALI Part 250 - Integrated bus power supply (DA +/-).
The output power of the integrated DALI Bus Power Supply has an output current of 52 mA (max. 60 mA).
It is activated by factory default.
Sensors and also external drivers could be directly connected to this power supply. The DALI power supply could be deactivated via software.

Power supplies can be combined up to 250 mA max in total.
This maximum must not exceed. The polarity has to be considered.

If the DALI power supply is activated, the driver must not be integrated into an existing, already with 250 mA powered DALI network.

6.2 AUX power supply

An auxiliary (AUX) supply provides 24 V DC to power e.g. a controller, an occupancy sensor, a photo sensor or other device. It eliminates the need of an AC/DC supply and the associated need of surge suppression and an EMI filter in such devices.
AUX supply specification:
Average power of 3 W.

Maximum voltage does not exceed 30 V under any load condition including open circuit.
Start-up time: 90 % of the nominal specified voltage level within 600 ms after applying mains power.
Start-up: After power-on, the load must limit the current consumption at the AUX terminals to at most 170 mA until the specified voltage is reached.

7. Protective features

7.1 Short-circuit behaviour

The LED drivers is protected against short circuits at the output side and will auto-restart all the time (burst mode), resume normal operating once the fault is eliminated.

7.2 No-load operation

The LED drivers will automatically shutdown the output when detecting an open circuit to prevent damage, connect the load and restart the AC power to recover the output.

7.3 Overload protection

Protection activates when the output power exceeds approximately 3% beyond its rated maximum. The driver initiates an intelligent current reduction, limiting the total output power to 1800W. If the output voltage is subsequently reduced, the output current will gradually recover to its normal level once the output voltage falls back to the full-load rated voltage.

7.4 Overtemperature protection

When tc temp hits 90°C, output current drops to 80%. At 95°C, it drops to 50%. When tc temp falls to 70°C, it resumes 100%.

8. Miscellaneous

8.1 Insulation and electric strength testing of luminaires

Electronic devices can be damaged by high voltage. This has to be considered during the routine testing of the luminaires in production.

According to UL 8750 (informative only!) each luminaire should be submitted to an insulation test with 500 V DC. The dielectric withstand test equipment shall employ a transformer of 500-VA or lager capacity and have a variable output voltage that is essentially sinusoidal or continuous direct current. The applied potential is to be increased from zero at a substantially uniform rate until the required test level is reached, and is to be held at that level for 1 minute.

As an alternative, UL8750 (informative only!) describes a test of the electrical strength with 2V AC + 1000V (or 1.414 x V DC) where “V” is the maximum AC (rms) voltage between the parts under tests. To avoid damage to the electronic devices this test must not be conducted.

8.2 Conditions of use and storage

Relative Humidity:	10 % up to max. 100 %, not condensed (max. 56 days/year at 85 %)
Storage temperature:	-40 °C / -40 °F up to max. +80 °C / +176 °F

The devices have to be acclimatised to the specified temperature range (ta) before they can be operated.

8.3 Maximum number of switching cycles

All LED driver are tested with 50,000 switching cycles.

8.4 Additional information

Additional technical information at www.tridonic.com → Technical Data

Lifetime declarations are informative and represent no warranty claim.
No warranty if device was opened.