EV-T2HPCC-DC500A-3,0M50ECBK11R - DC charging cable

1369289

https://www.phoenixcontact.com/gb/products/1369289

Please be informed that the data shown in this PDF document is generated from our online catalog. Please find the complete data in the user documentation. Our general terms of use for downloads are valid.

CHARX connect professional, CCS type 2, HPC DC charging cable, up to 700 A in Boost mode, 500 A permanent, 1000 V DC, with cooled vehicle charging connector and cooled cable, cable: 3 m, black, straight, with replaceable mating face frame, with replaceable DC power contacts, with right-hand angled panel feed-through, with variable-speed fan, with digital temperature sensors, PHOENIX CONTACT logo, IEC 62196-3-1, for charging electric vehicles (EV) with direct current (DC)

Product description

DC charging cable with vehicle charging connector and free cable end for fast charging of electric vehicles (EV) with direct current (DC) via CCS type 2 vehicle charging inlets, for installation at charging stations for e-mobility (EVSE)

Your advantages

- Complete product range
- The right charging cable for every application, from the carport to the charging park
- Ultra-fast HPC charging, with temporary power up to 500 kW
- Convenient handling due to the ergonomic design
- Available with your logo on request - for consistent branding of your charging station
- Developed and produced in accordance with the IATF 16949 automotive standard and ISO 9001
- Additional safety thanks to integrated leakage sensors and a wear indicator in the cable sheath
- Convenient communication interfaces via CAN bus and digital output
- Maintenance-friendly replacement of the mating face frame without draining the coolant
- Integrated strain relief of single-core wires directly in the panel feed-through
- Pre-assembled busbar screw connection for straightforward connection of the customer’s busbars or cable lug solutions

Commercial data

Item number	1369289
Packing unit	1 pc
Minimum order quantity	1 pc
Sales key	XWBLNI
Product key	XWBLNI
GTIN	4063151723446
Weight per piece (including packing)	9,811 g
Weight per piece (excluding packing)	9,811 g
Customs tariff number	85444290
Country of origin	PL

Technical data

Product properties

Product type	DC charging cable
Product family	CHARX connect professional
Type	HPC DC charging cable
	with cooled vehicle charging connector and cooled cable
Design	with replaceable mating face frame
	with replaceable DC power contacts
	with right-hand angled panel feed-through
	with variable-speed fan
	with digital temperature sensors
	Liquid cooling
Charging standard	CCS type 2
Charging mode	Mode 4
Affixed logo	PHOENIX CONTACT logo
Label	8.9 mm x 28.9 mm (customer logo on request)

Electrical properties

Charging power and current (DC charging)

Type of charging current	DC
Charging current	500 A DC
Charging power	500 kW
Rated voltage	1000 V

Charging power and current (DC charging in Boost Mode)

Type of charging current	DC Boost Mode
Charging current	up to 700 A DC
Charging power	up to 700 kW
Rated voltage	1000 V
Note	The specifications refer to charging in Boost Mode and are dependent on ambient conditions. For further details, see the packing slip in the download area.

Charging power and current (DC charging in the event of cooling unit failure)

Charging current	150 A DC
Charging power	150 W
Rated voltage	1000 V
Note	The specifications refer to charging with a defective cooling unit and a short charging process.

Pin assignment (Power contacts)

Number	3 (PE, DC+, DC-)
Rated voltage	1000 V DC
Rated current	500 A (up to 40 °C)

Pin assignment (Signal contacts)

Note on the connection method	Single-core wires for four-wire measurement are not connected
Type of signal transmission	Pulse width modulation with modulated Powerline communication in accordance with ISO/IEC 15118 / DIN SPEC 70121
Number	2 (CP, PP)
Rated voltage	30 V AC
Rated current	2 A
Coding	1500 Ω (between PE and PP)

Temperature sensors (NTC)

Sensor type	NTC
Attachment point	2 sensors for the replaceable front DC contacts
	2 sensors for the internal DC power wires
	1 sensor on the PCB in the housing
Switch-off temperature	90 °C

Temperature sensors (Pt 1000)

Sensor type	Pt 1000
Standards/regulations	DIN EN 60751
Attachment point	Sensor in the panel feed-through
Switch-off temperature	90 °C ±1 K (equivalent to a Pt 1000 value of 1346.5 Ω)
Long-term stability	0.06 % (after 1000 hours at 130 °C)
Recommended measured current	1 mA (1 V at 0°C)
Coefficient	3850 ppm/K
Ambient temperature	-50 °C ... 130 °C (Operation)

Cooling system (Cooling unit)

Cooling	in the vehicle charging connector and in the cable
Coolant	50% water, 50% glycol (Glysofor N)
Cooling hose diameter	1x 11.50 mm Supply hose
	2x 8.80 mm Return hoses
Cooling capacity	600 W (Cable length: 3 m)
	800 W (Cable length: 4 m)
	900 W (Cable length: 5 m)
	1050 W (Cable length: 6 m)
Flow rate	2 l/min
Operating pressure	1.00 bar ... 2.00 bar
Relief pressure	2.00 bar
Maximum permissible pressure	4.00 bar
Flow-in temperature	15 °C

Ventilation (Fan)

Cooling	The fan provides additional cooling inside the panel feed-through to increase the charging current.
	The fan can be attached to the panel feed-through as an option.

Cable structure	2x AWG 26
Nominal voltage U_N	24 V
Nominal voltage range	18 V AC ... 24 V AC
Fan speed indication	4400 min-1
Fan volumetric flow	28 m³/h
Mechanical service life	70.000 h (at 40 °C)
Ambient temperature	-20 °C ... 40 °C

Dimensions

Vehicle charging connector

Dimensional drawing	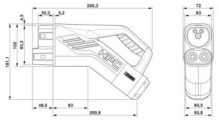 Make sure that the vehicle charging connector is placed in an appropriate charging connector holder, which ensures a minimum protection rating of IP24 in accordance with IEC 61851-1, for the entire time between charging. To create this charging connector holder, use the dimensions of the vehicle charging connector. Detailed dimensions can also be found in the Download area.
Width	72 mm
Height	181.1 mm
Depth	285.3 mm

Horizontal fan

Dimensional drawing	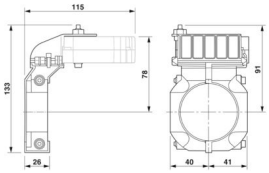
Width	81 mm
Height	133 mm
Depth	115 mm

Vertical fan

Dimensional drawing	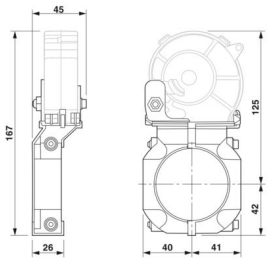
Width	81 mm

Height	133 mm
Depth	115 mm

Panel feed-through

Dimensional drawing	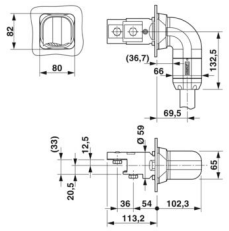
Width	80 mm
Height	82 mm
Depth	215.5 mm

Bore dimensions

Dimensional drawing	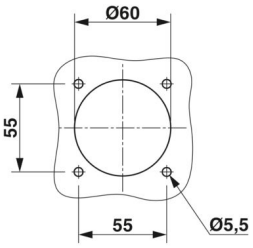 Drill hole spacing
Width	55 mm
Height	55 mm
Diameter	60 mm

Material specifications

Color (Housing)	black (9005)
Color (Handle area)	black (9005)
Color (Mating face)	black (9005)
Color (Cable)	black (9005)
Color (Panel feed-through)	black (9005)
Material (Vehicle charging connector)	Plastic
Material (Cable outer sheath)	EVM-1 in accordance with EN 50620
Material (Panel feed-through)	Plastic
Material (Contact surface)	Silver
Note	The color appearance and gloss level of the charging cable may vary.
Flammability rating according to UL 94	V0 (Mating face)

Cable/line

Cable length	3 m ±45 mm

Wiring standards/regulations	according to UL 62 (File E515623, Vol 1)
	according to IEC 62893
Cable weight	max. 1938.00 kg/km
Cable type	straight
Cable structure	5 x 25 mm² + 7 x 0.75 mm²
External cable diameter	35.70 mm ±0.4 mm
Outer sheath, material	TPE-U in accordance with IEC 62893-1
Cable resistance	≤ 0.00078 Ω/m (based on a power core, at an ambient temperature of 20°C)
Bending radius	min. 357 mm (10x Ø)

Mechanical properties

Coolant	50% water, 50% glycol (Glysofor N)

Mechanical data

Insertion/withdrawal cycles	> 10000 (based on IEC 62196-1)
Insertion force	< 100 N
Withdrawal force	< 100 N

Environmental and real-life conditions

Ambient conditions

Degree of protection (Vehicle charging connector)	IP54 (plugged in; when plugged in and ready to operate, the degree of protection is only ensued if both plug-in components are original products from Phoenix Contact or suitable standard-compliant products)
Degree of protection (Panel feed-through)	IP54
Ambient temperature (operation)	-30 °C ... 40 °C
	max. 55 °C (Current reduction required, observe the DC contact temperature limit value of 90°C)
Ambient temperature (storage/transport)	-40 °C ... 80 °C
Altitude	5000 m (above sea level)

Standards and regulations

Standards/specifications	IEC 62196-3-1
Note	Compliant with AFIR - EU 2025/656

Mounting

Mounting type Panel feed-through	Rear panel mounting
Mounting type Fans	Rear panel mounting (optional for increasing the charging current up to 500 A)
Fixing screws	M5x16

Drawings

Dimensional drawing

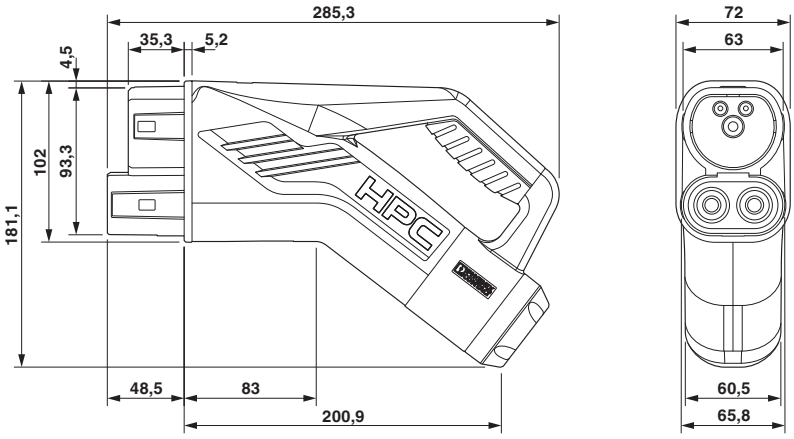

Make sure that the vehicle charging connector is placed in an appropriate charging connector holder, which ensures a minimum protection rating of IP24 in accordance with IEC 61851-1, for the entire time between charging. To create this charging connector holder, use the dimensions of the vehicle charging connector. Detailed dimensions can also be found in the Download area.

Dimensional drawing

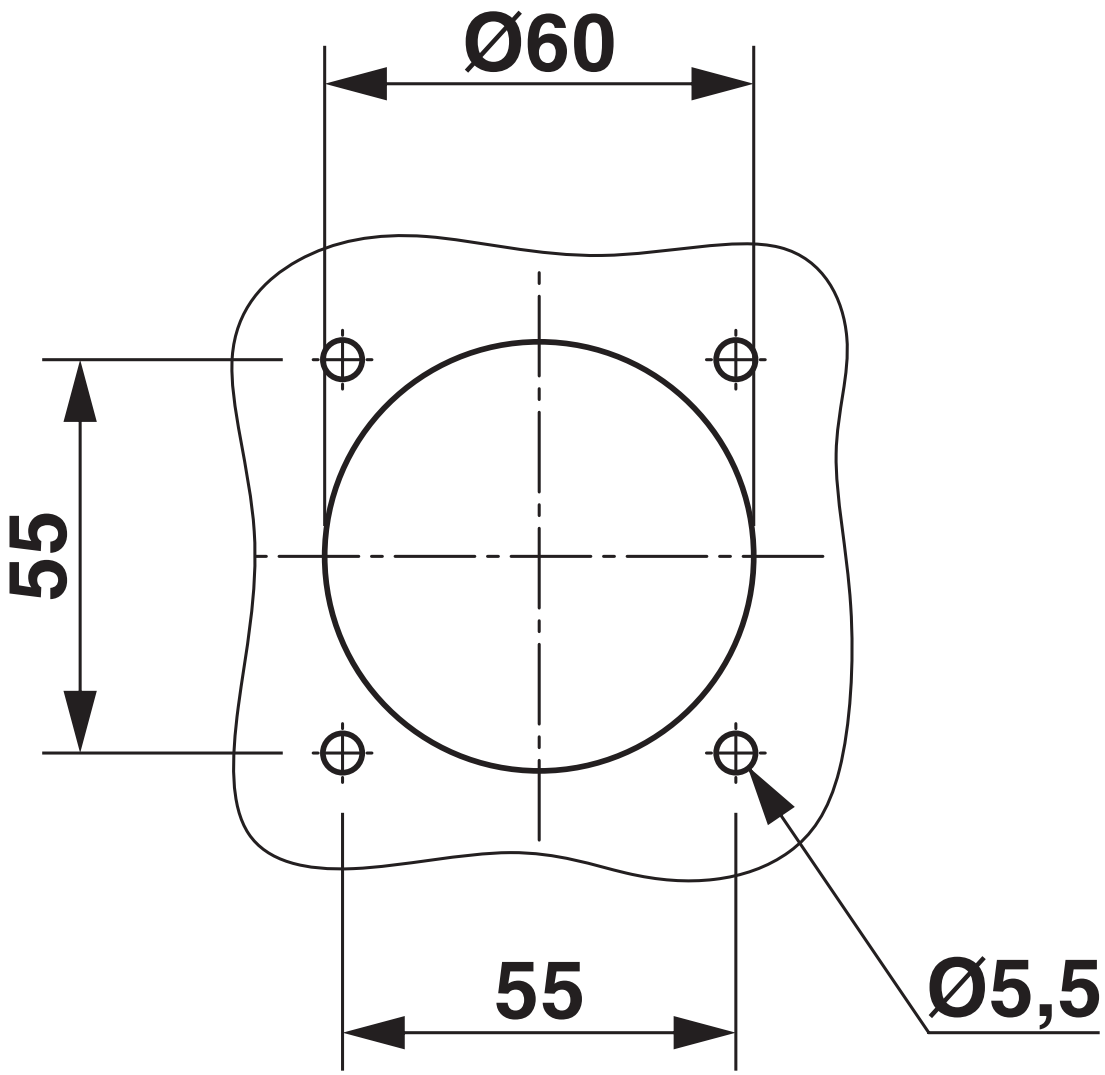

Drill hole spacing

Dimensional drawing

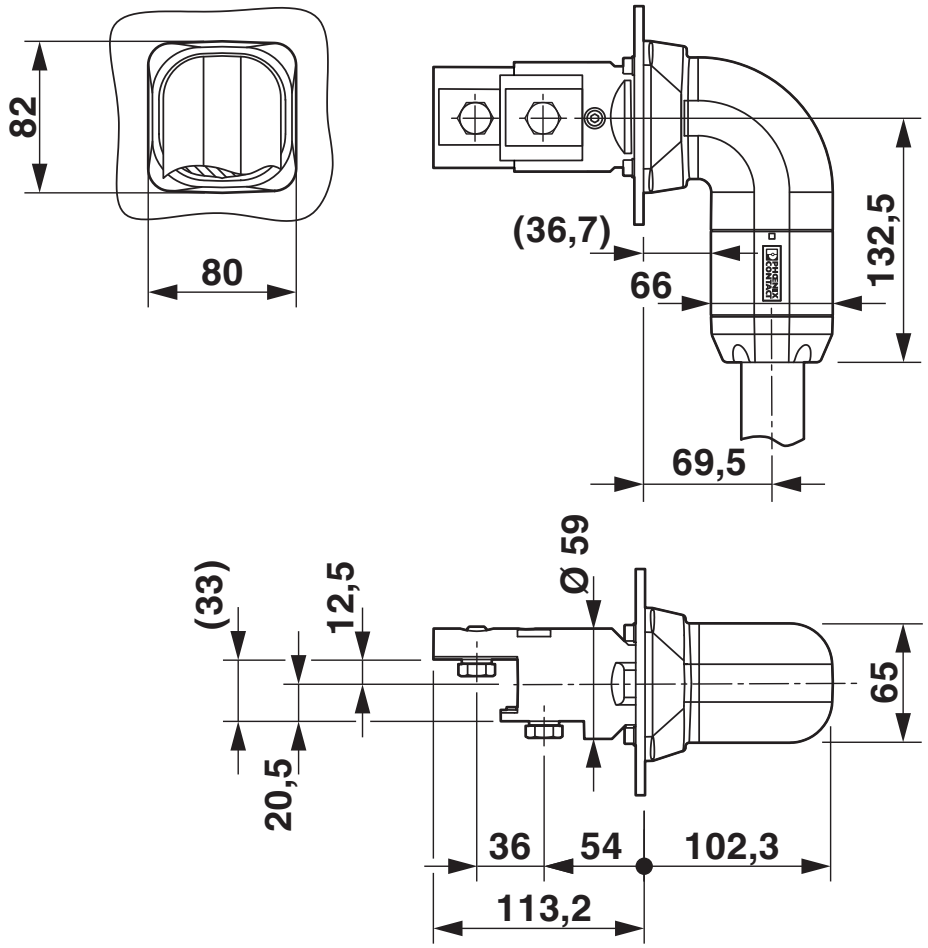

Right-hand angled panel feed-through

Dimensional drawing

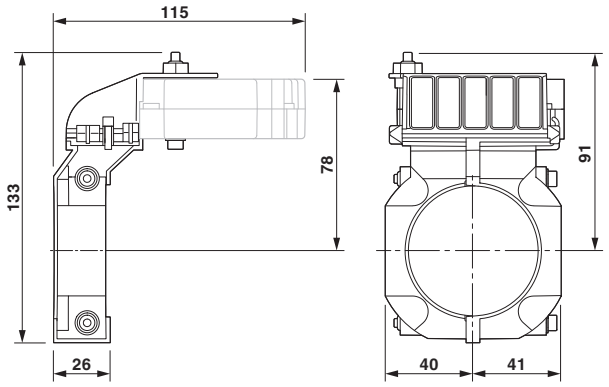

Fan for horizontal attachment to the panel feed-through

Dimensional drawing

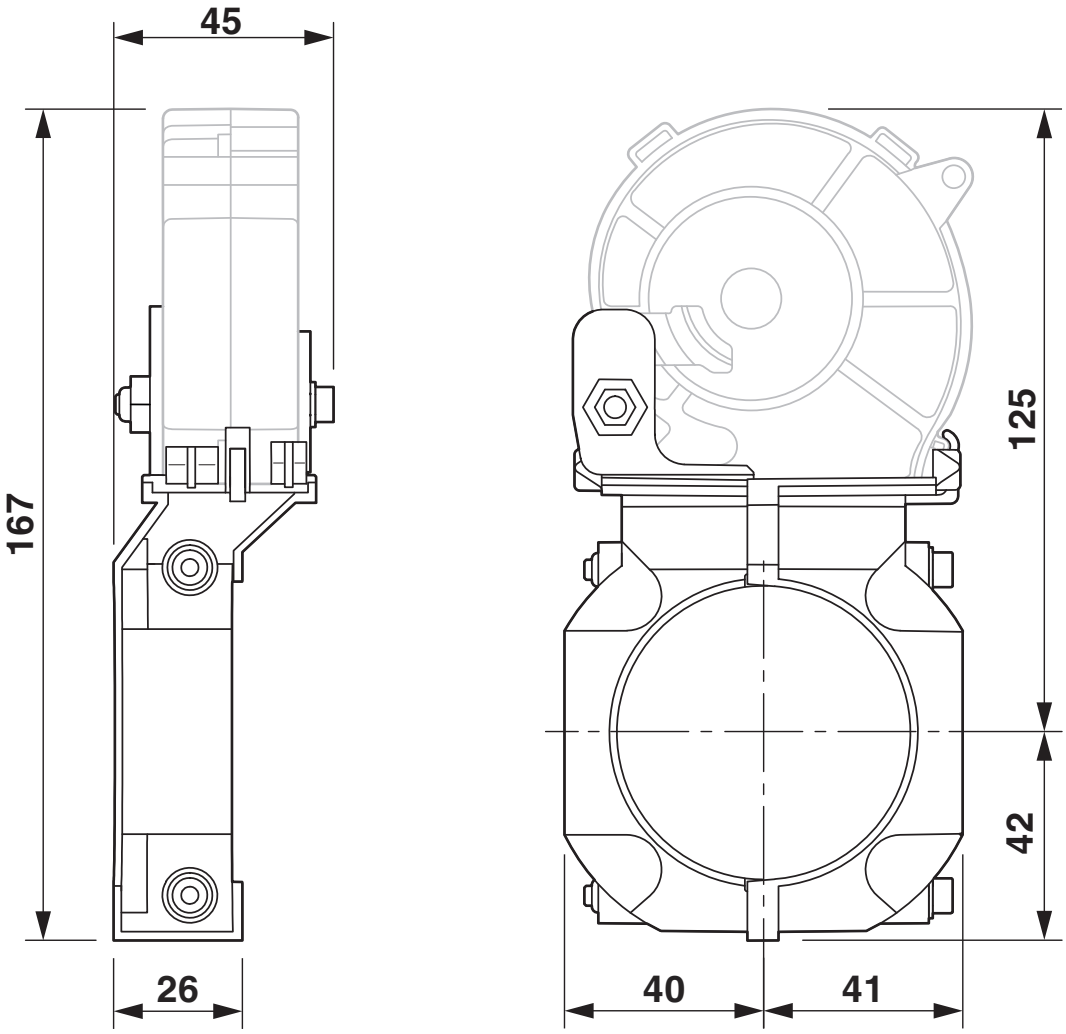

Fan for vertical attachment to the panel feed-through

Schematic diagram

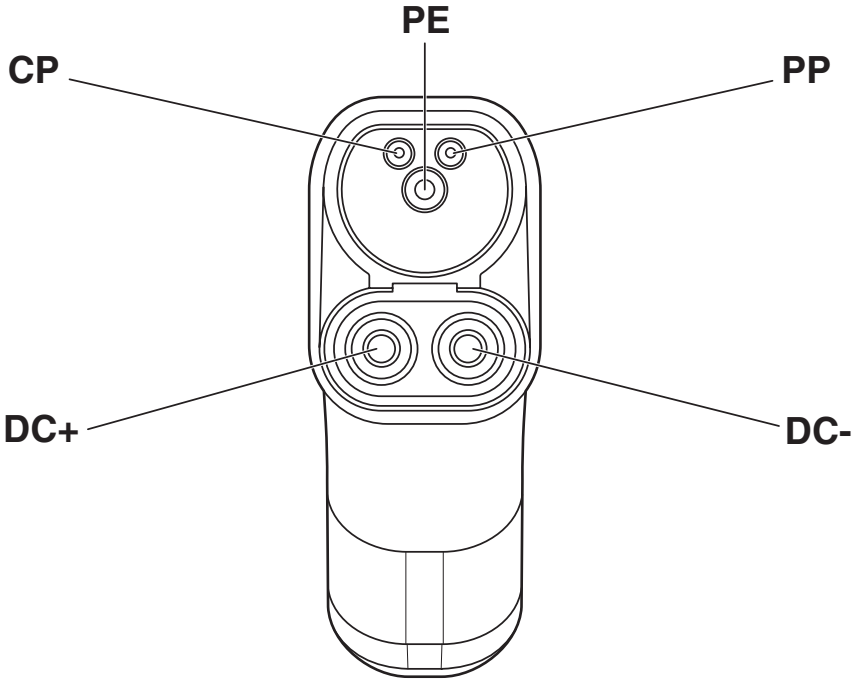

Pin assignment of the Vehicle Connector

Schematic diagram

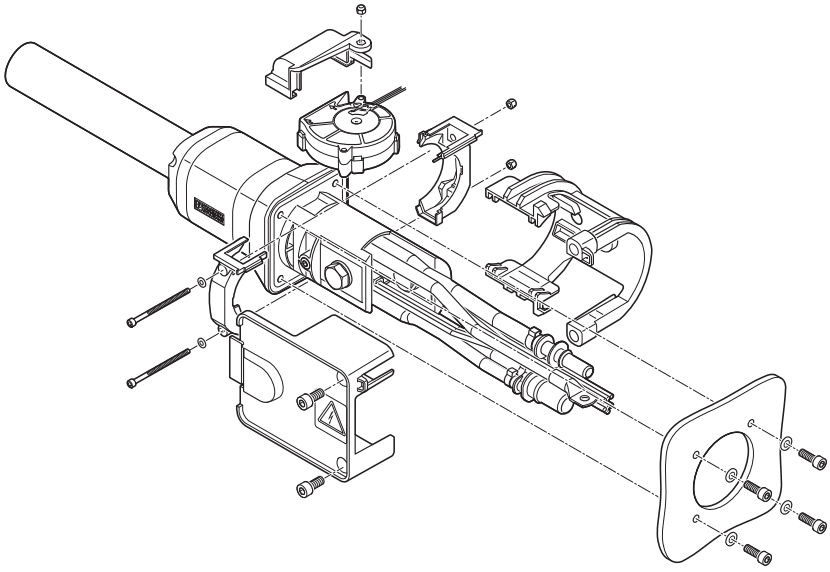

Assembly instructions for attaching the touch protection using straight panel feed-through as an example

Schematic diagram

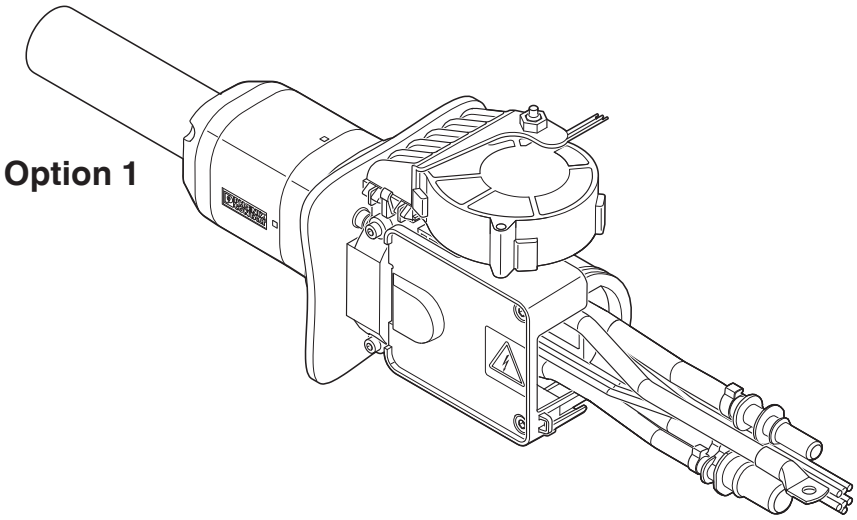

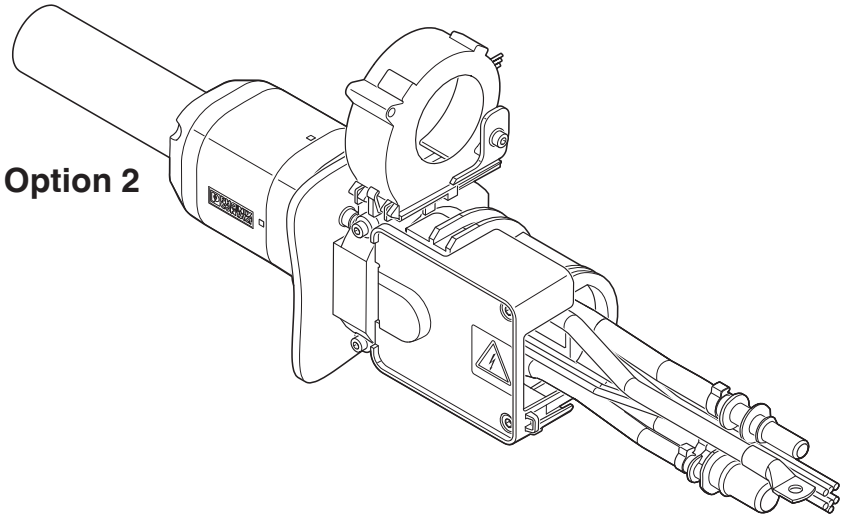

Select one option for mounting the fan. Illustrated using straight panel feed-through as an example.

Schematic diagram

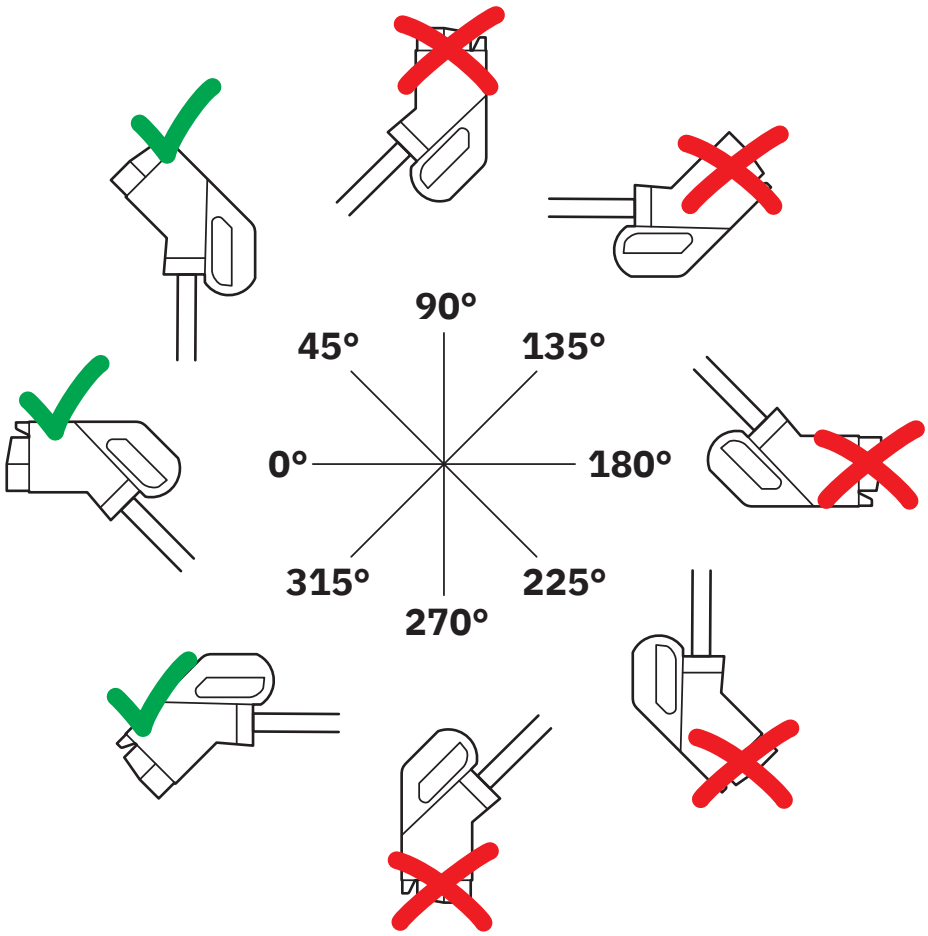

The resting position must be installed in the charging station such that the user cannot hang up the vehicle connector upside down (90° to 270°). However, positions rotated upward (45°) or downward (315°) are options for a resting position.

Schematic diagram

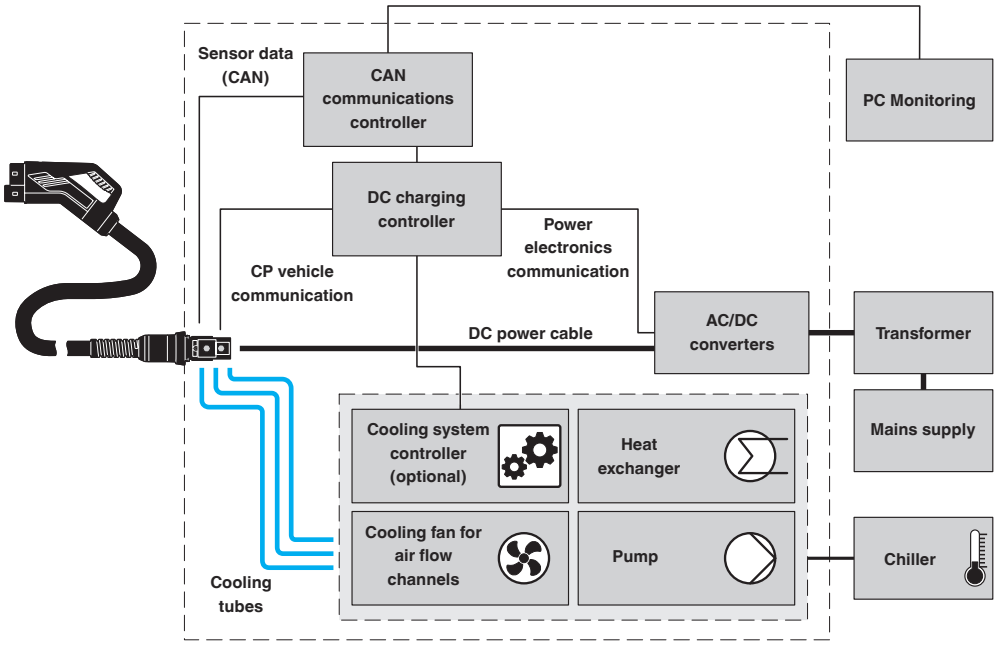

Central system: cooling unit and controller are positioned externally and supply multiple charging stations, each of which is equipped with a heat exchanger. The cooling is done actively using a chiller.

Schematic diagram

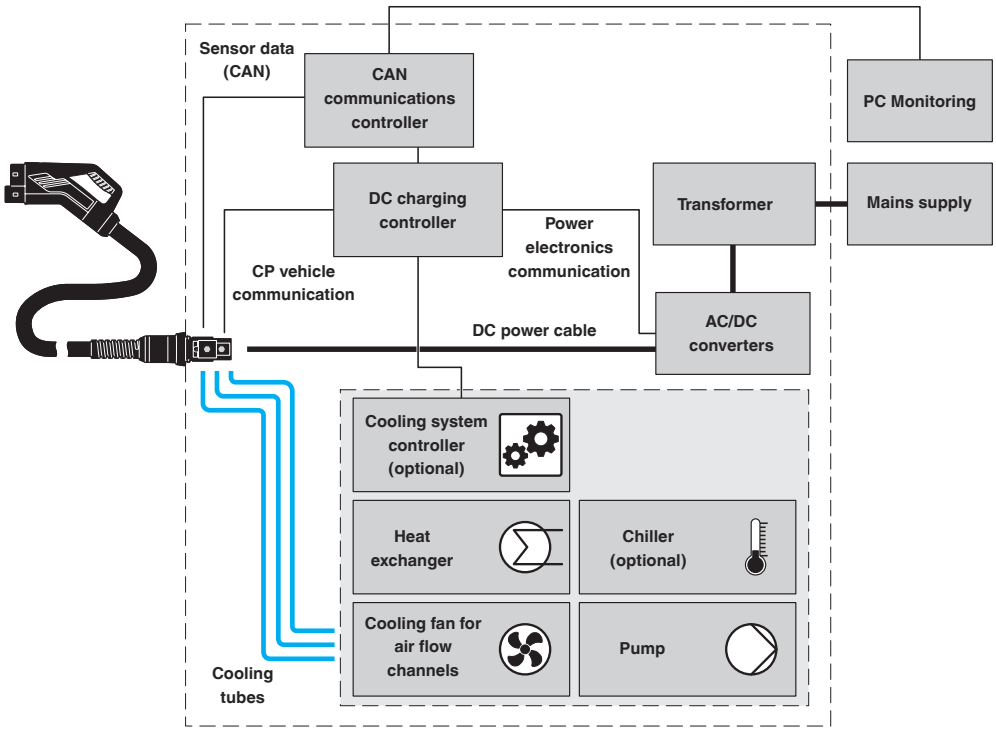

Standalone, decentralized system: cooling unit and controller are integrated into the charging station. The choice of cooling unit can be passive or active (i.e., with or without chiller).

Schematic diagram

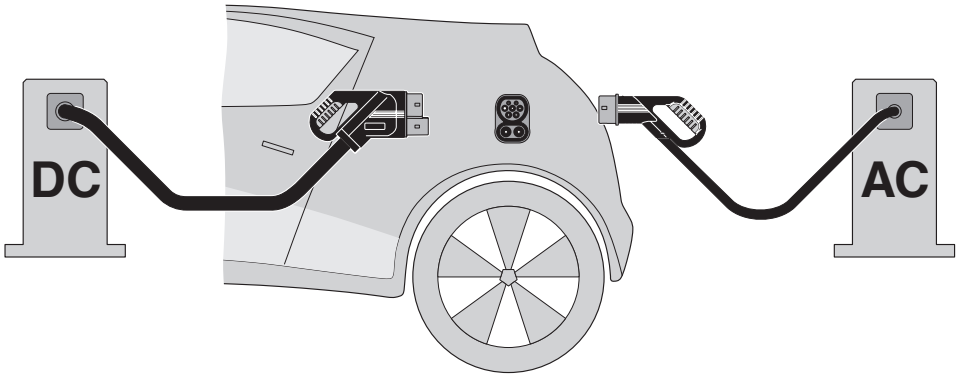

The Combined Charging System (CCS) principle - standard-compliant charging system for electric vehicles, which supports both conventional AC charging and fast DC charging. Both Vehicle Connectors fit into the CCS Vehicle Inlet.

Schematic diagram

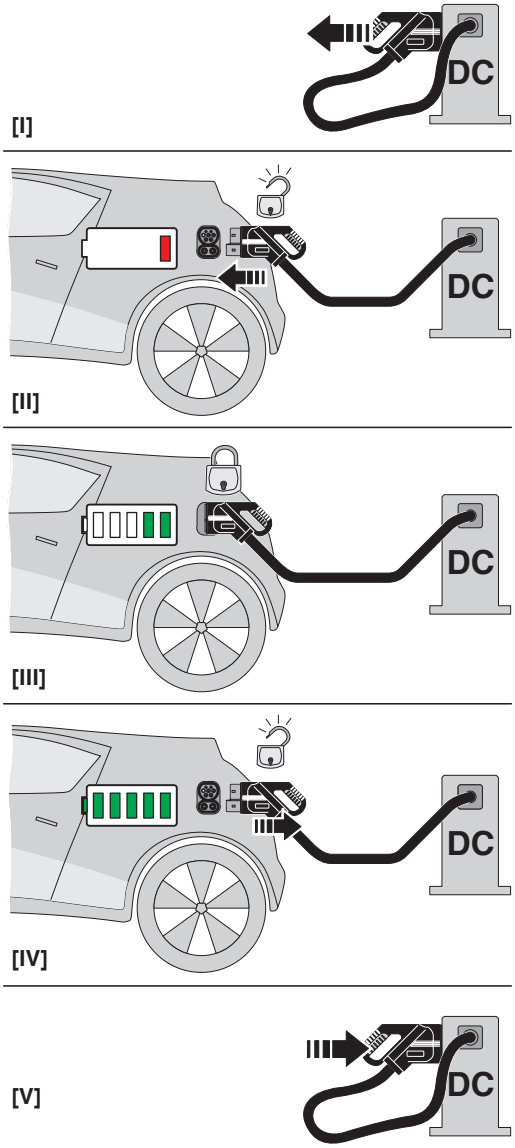

Operating instructions

Schematic diagram

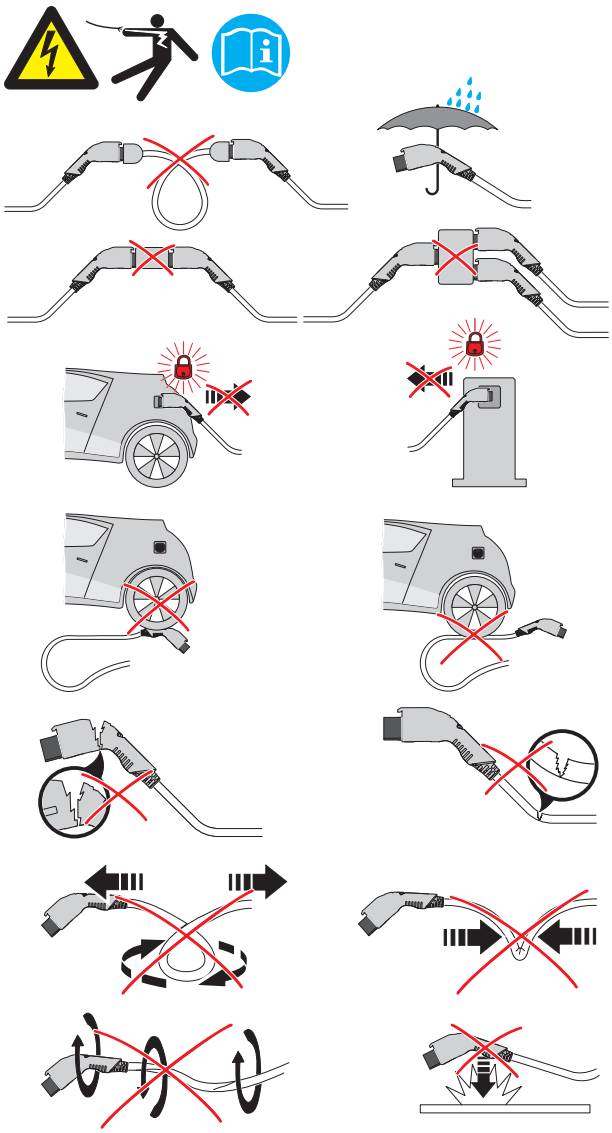

Warning signal note

Approvals

To download certificates, visit the product detail page: https://www.phoenixcontact.com/gb/products/1369289

IECEE CB Scheme
Approval ID: JPTUV-161807

	Nominal voltage U_N	Nominal current I_N	Cross section AWG	Cross section mm^2
keine				
	1000 V	500 A	-	-

Classifications

ECLASS

ECLASS-13.0	27144705
ECLASS-15.0	27144705

ETIM

ETIM 10.0	EC002897

UNSPSC

UNSPSC 21.0	39121500

Environmental product compliance

EU RoHS

Fulfills EU RoHS substance requirements	Yes
Exemption	6(c), 7(c)-I

China RoHS

Environment friendly use period (EFUP)	EFUP-50
	An article-related China RoHS declaration table can be found in the download area for the respective article under "Manufacturer declaration". For all articles with EFUP-E, no China RoHS declaration table issued and required.

EU REACH SVHC

REACH candidate substance (CAS No.)	Lead(CAS: 7439-92-1)
	6,6'-di-tert-butyl-2,2'-methylenedi-p-cresol(CAS: 119-47-1)
SCIP	8699c0fe-8aa5-4a02-88e5-271ff51a4827

EF3.1 Climate Change

CO2e kg	96.47 kg CO2e

Phoenix Contact 2026 © - all rights reserved
https://www.phoenixcontact.com

PHOENIX CONTACT Ltd
Halesfield 13, Telford
Shropshire, TF7 4PG
01952 681700
info@phoenixcontact.co.uk