FOR 客户名称	APPROVED 客户确认签字	ATTN 销售负责人

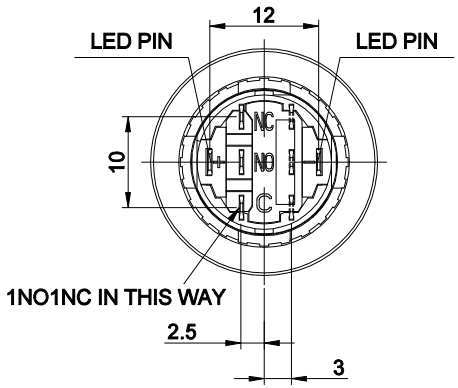

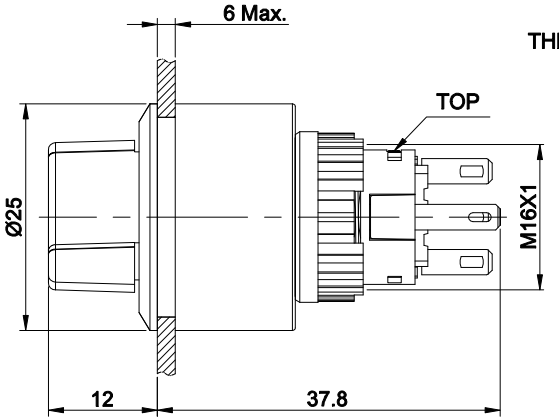

THE SHADED PART IS ILLUMINATED

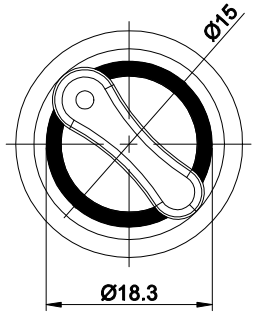

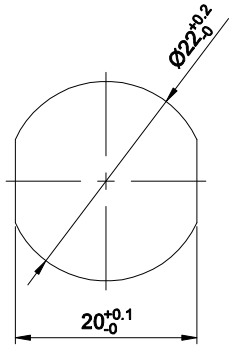

PANEL CUTOUT

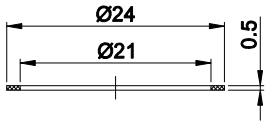

SEAL RING

PART NUMBER:LAS1-AP(W)Y-□XB/2◆/△/▲/※

"□"	CONTACT STRUCTURE
11	1NO1NC
22	2NO2NC

"▲"	LAMP VOLTAGE
6V	AC/DC 6V
12V	AC/DC 12V
24V	AC/DC 24V
110V	AC/DC 110V
220V	AC/DC 220V
OTHER VOLTAGE CAN BE MADE TO ORDER	

"◆"	OPERATION TYPE
1	MAINTAIN
3	RETURN

"△"	CAP OR LAMP COLOR
R	RED
G	GREEN
Y	YELLOW
B	BLUE
W	WHITE

"※"	PROTECTION DEGREE
NO LETTER	IP40
P	IP65(MAINTAIN)

DIAGRAM

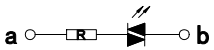

CONTACT COMPOSITION

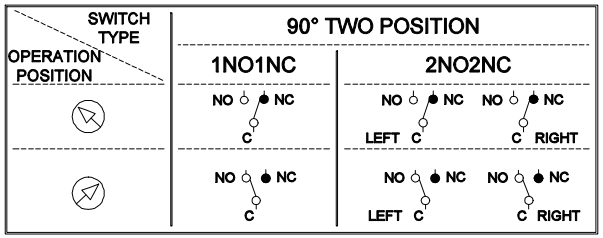

SPECIFICATIONS:
1.SWITCH RATING: Ui:250V, Ith:5A.
2.MECHANICAL LIFE: ≥500,000 cycles.
3.ELECTRICAL LIFE: ≥50,000 cycles.
4.INITIAL CONTACT RESISTANCE: ≤50mΩ.
5.INSULATION RESISTANCE: ≥1000MΩ(500VDC).
6.DIELECTRIC STRENGTH:
BETWEEN CONTACT AND LAMP TERMINALS: AC 2,000V, RMS 50Hz, 1min;
BETWEEN TERMINALS OF THE SAME POLE: AC 1,500V, RMS 50Hz, 1min;
BETWEEN TERMINALS OF DIFFERENT POLE: AC 2,000V, RMS 50Hz, 1min.
7.OPERATING TEMPERATURE: -25˚C～ +55˚C(NO FREEZING, KEEP THE AIR FLOWING AROUND PUSHBUTTON).
8.TORQUE: 0.6Nm Max. APPLIED TO NUT.
9.FRONT PANEL PROTECTION DEGREE: IP40(IP65 MAINTAIN CAN BE CUSTOMIZED).
10.TERMINAL TYPE: PIN TERMINAL(2.8X0.5mm).
11.OPERATING REQUIREMENT: 90°ROTATION REQUIRES, ROTATION IN PLACE.
12.GENERAL TOLERANCE:0-18mm=±0.25, 18-80mm=±0.52.
13.RoHS CAN BE CUSTOMIZED.

MATERIALS:
1.CONTACT: SILVER ALLOY.
2.BUTTON: PC.
3.BODY: PC.
4.BASE: PBT.

BRAND 品牌	红波按钮制造有限公司 ONPOW PUSH BUTTON MANUFACTURE CO.,LTD.				
ONPOW 欧宝龙®					
TITLE 名称	LAS1-AP(W) SERIES SELECTOR SWITCH			UNIT 单位	mm
DWG NO. 图号	LAS1-AP(W)Y-XB(二位置)(带灯)		SCALE 比例 1.2 : 1	SIZE 图纸	A4
FILE NAME 档案名称	LAS1-AP(W)Y -XB2.DWG	DRAWN 制图 HCP 2024/04/24	SHEET 张 1/1	REV. 版本	V1.0