FOR 客户名称	APPROVED 客户确认签字	ATTN 销售负责人

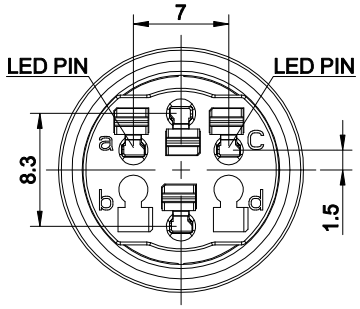

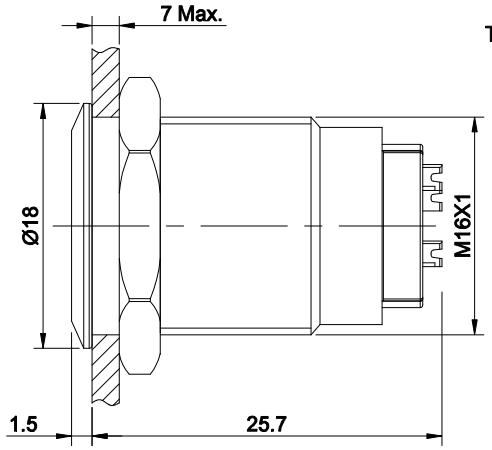

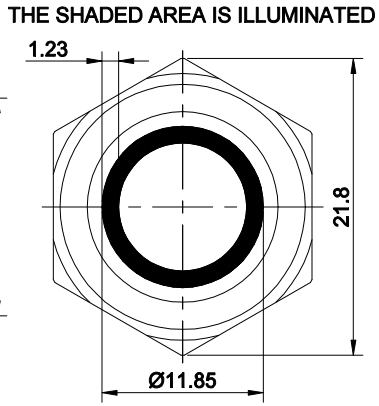

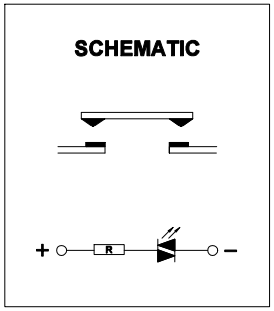

DOUBLE-BREAKPOINT SLOW-ACTING CONTACT SWITCH WITH TWO TERMINALS

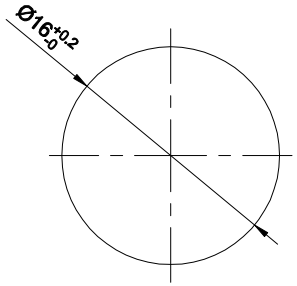

PANEL CUTOUT

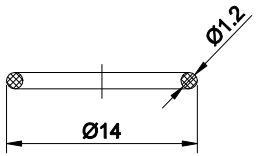

SEAL RING

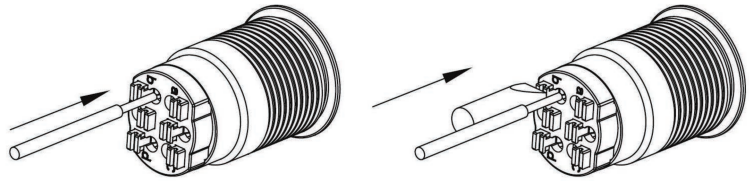

Steel wire

First, use a screwdriver to hold the pusher, then insert the flexible wire

	Wire specifications (mm²)	Strip length (mm)	First cable tension (N)	Tin immersion thickness (mm)
Steel wire	0.14	7	>10	≤0.3
	1		>20	
flexible wire	0.14		>10	
	0.5		>20	

PART NUMBER: ONPOW6316F-10■E/Q/△/▲/S/※

"■"	OPERATION MODE
NO LETTER	MOMENTARY
Z	LATCHING

"※"	PROTECTION DEGREE
NO LETTER	IP65
FP	IP67 (CUSTOMIZED)

"△"	LAMP COLOR
R	RED
G	GREEN
Y	YELLOW
B	BLUE
W	WHITE

"▲"	LAMP VOLTAGE
6V	AC/DC 6V
12V	AC/DC 12V
24V	AC/DC 24V
110V	AC/DC 110V
220V	AC/DC 220V
OTHER VOLTAGE CAN BE MADE TO ORDER	

SPECIFICATIONS:
1.SWITCH RATING: 10A/24VDC(DC-12).
2.MECHANICAL LIFE: 1,000,000 cycles(MOMENTARY);
≥500,000 cycles(LATCHING).
3.ELECTRICAL LIFE: ≥50,000 cycles.
4.INITIAL CONTACT RESISTANCE: ≤50mΩ.
5.INSULATION RESISTANCE: ≥1000MΩ(500VDC).
6.POWER-FREQUENCY WITHSTAND VOLTAGE: 1,000V, RMS 50Hz, 1min.
7.OPERATING TEMPERATURE: -25℃～ +55℃(NO FREEZING, KEEP THE AIR FLOWING AROUND PUSHBUTTON).
8.OPERATING FORCE: ABOUT 3.0N.
9.OPERATING TRAVEL: ABOUT 2.4mm.
10.TORQUE: ABOUT 0.6N·m APPLIED TO NUT.
11.FRONT PANEL PROTECTION DEGREE: IP65(IP67 CAN BE CUSTOMIZED).
12.TERMINAL TYPE: QUICK CONNECTOR.
13.GENERAL TOLERANCE:0-18mm=±0.25, 18-80mm=±0.52.
14.COMPLIANT WITH RoHS.

MATERIALS:
1.CONTACT: SILVER ALLOY.
2.BUTTON: STAINLESS STEEL/PC.
3.BODY: STAINLESS STEEL.
4.BASE: PA.

BRAND 品牌	红波按钮制造有限公司 ONPOW PUSH BUTTON MANUFACTURE CO.,LTD.		
ONPOW 欧宝龙®			
TITLE 名称	ONPOW63 SERIES ANTI-VANDAL PUSH BUTTON	UNIT 单位	mm
DWG NO. 图号	ONPOW6316F-10E/Q	SCALE 比例 1.8 : 1	SIZE 图纸 A4
FILE NAME 档案名称	ONPOW6316-E .DWG	DRAWN 制图 YDY 2024/07/23	SHEET 张 1/1	REV. 版本 V1.0