# Data Sheet | Item Number: 750-843

Controller ETHERNET; 1st Generation; ECO

https://www.wago.com/750-843

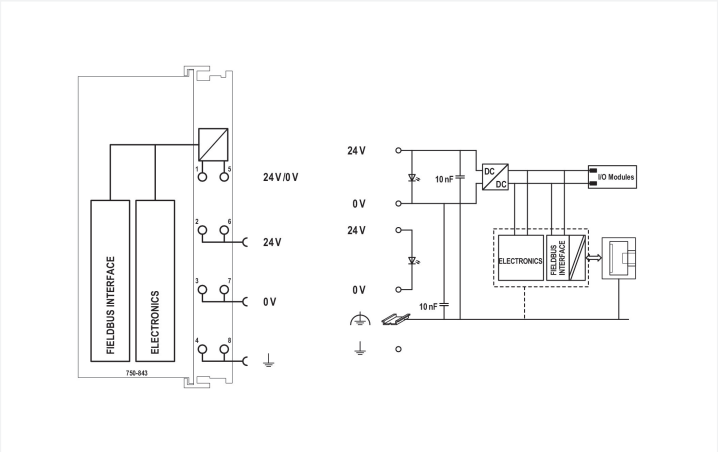


Color: light gray

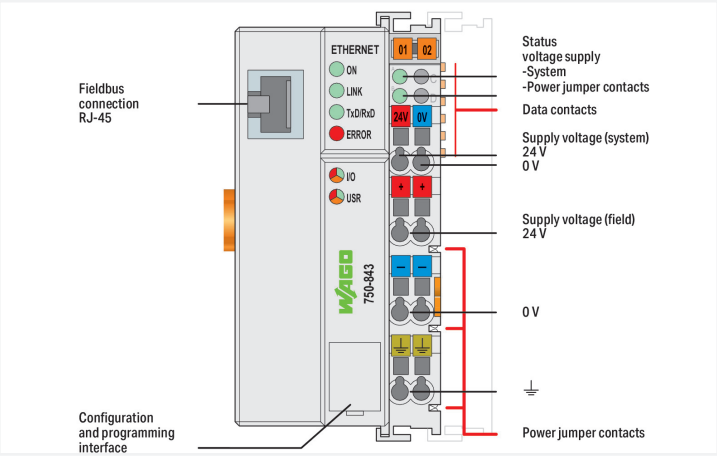


## Technical data

| | |
|---|---|
| Communications | Modbus (TCP, UDP)<br>ETHERNET |
| ETHERNET protocols | HTTP<br>BootP |
| Visualization | none |
| CPU | 16 bits |
| Programming languages per IEC 61131-3 | Instruction List (IL)<br>Ladder Diagram (LD)<br>Function Block Diagram (FBD)<br>Continuous Function Chart (CFC)<br>Structured Text (ST)<br>Sequential Function Chart (SFC) |
| Programming environment | WAGO-I/O-*PRO* V2.3 (based on CODESYS V2.3) |
| Configuration options | WAGO-I/O-*CHECK* |
| Cycle time | < 3 ms for 1000 bit instructions/ 256 digital I/O |
| Transmission rate | 10 Mbit/s |
| Bus segment length (max.) | 100 m |
| Transmission medium (communication/fieldbus) | Twisted pair S-UTP; 100 Ω; Cat. 5 |
| Program memory | 64 KB |
| Data memory | 64 KB |
| Non-volatile software memory | 8 KB |
| Memory for fieldbus input variables (max.) | 512 bytes |
| Memory for fieldbus output variables (max.) | 512 bytes |
| Number of modules per node (max.) | 64 |
| Number of modules without a bus extension (max.) | 64 |
| Input and output process image (fieldbus) max. | 512 bytes/512 bytes |

## Technical data

| | |
|---|---|
| Indicators | LED (ON, LINK, TxD/RxD) green: Fieldbus initialization, network connection, data exchange; LED (ERROR) red: Fieldbus error; LED (I/O, USR) red/green/orange: Local data bus status, status programmable by user; LED (A, B) green: System power supply status, field supply |
| Supply voltage (system) | 24 VDC (-25 … +30 %); via pluggable connector (CAGE CLAMP® connection) |
| Input current (typ.) at nominal load (24 V) | 500 mA |
| Power supply efficiency (typ.) at nominal load (24 V) | 87 % |
| Current consumption (5 V system supply) | 200 mA |
| Total current (system supply) | 1800 mA |
| Supply voltage (field) | 24 VDC (-25 … +30 %); via power jumper contacts |
| Current carrying capacity (power jumper contacts) | 10 A |
| Number of outgoing power jumper contacts | 3 |
| Isolation | 500 V system/field |

## Connection data

| | |
|---|---|
| Connection technology: communication/fieldbus | Modbus (TCP, UDP): 1 x RJ-45 |
| Connection technology: system supply | 2 x CAGE CLAMP® |
| Connection technology: field supply | 6 x CAGE CLAMP® |
| Connectable conductor materials | Copper |
| Connection type | System/field supply |
| Solid conductor | 0.08 … 2.5 mm² / 28 … 14 AWG |
| Fine-stranded conductor | 0.08 … 2.5 mm² / 28 … 14 AWG |
| Strip length | 8 … 9 mm / 0.31 … 0.35 inches |
| Connection technology: device configuration | 1 x Male connector; 4-pole |

## Physical data

| | |
|---|---|
| Width | 50.5 mm / 1.988 inches |
| Height | 100 mm / 3.937 inches |
| Depth | 71.1 mm / 2.799 inches |
| Depth from upper-edge of DIN-rail | 63.9 mm / 2.516 inches |

## Mechanical data

| | |
|---|---|
| Mounting type | DIN-35 rail |

## Environmental requirements

| | |
|---|---|
| Ambient temperature (operation) | 0 … +55 °C |
| Ambient temperature (storage) | -25 … +85 °C |
| Protection type | IP20 |
| Pollution degree | 2 per IEC 61131-2 |
| Operating altitude | without temperature derating: 0 … 2000 m; with temperature derating: 2000 … 5000 m (0.5 K/100 m); 5000 m (max.) |
| Mounting position | Horizontal left, horizontal right, horizontal top, horizontal bottom, vertical top and vertical bottom |
| Relative humidity (without condensation) | 95 % |
| Vibration resistance | 4g per IEC 60068-2-6 |
| Shock resistance | 15g per IEC 60068-2-27 |
| EMC immunity to interference | per EN 61000-6-2, marine applications |
| EMC emission of interference | per EN 61000-6-4, marine applications |
| Exposure to pollutants | per IEC 60068-2-42 and IEC 60068-2-43 |
| Permissible $H_2S$ contaminant concentration at a relative humidity 75 % | 10 ppm |
| Permissible $SO_2$ contaminant concentration at a relative humidity 75 % | 25 ppm |

 Continued on next page

## Commercial data

| | |
|---|---|
| Product Group | 15 (I/O System) |
| PU (SPU) | 1 pcs |
| Packaging type | Box |
| Country of origin | DE |
| GTIN | 4045454897888 |
| Customs tariff number | 85371091990 |

## Environmental Product Compliance

| | |
|---|---|
| CAS-No. | 12060-00-3<br>1303-86-2<br>1317-36-8<br>25550-51-0<br>7439-92-1<br>7440-43-9<br>79-94-7 |
| REACH Candidate List Substance | 2,2',6,6'-tetrabromo-4,4'-isopropylidenediphenol<br>4-Methyl-1,2-cyclohexanedicarboxylic anhydride<br>Cadmium<br>Diboron trioxide<br>Lead<br>Lead monoxide<br>Lead titanium oxide (PbTiO3) |
| RoHS Compliance Status | Compliant,With Exemption |
| RoHS Exemption | 6(c)<br>7(a)<br>7(c)-I<br>7(c)-II |
| SCIP notification number (Bulgaria) | 4fbc010a-9134-45b2-9e8b-46542a402dc5 |
| SCIP notification number (Czech Republic) | e59088ac-404e-4769-887f-30c5ecddcc9b |

## Approvals / Certificates

### General approvals

| Approval | Standard | Certificate Name |
|---|---|---|
| EAC<br>GZO Almaty Standart | TP TC 020/2011 | EAC CoC 03083 |
| KC<br>National Radio Research Agency | Article 58-2, Clause 3 | MSIP-REM-W43-PFC750 |
| UL<br>Underwriters Laboratories Inc. (ORDINARY LOCATIONS) | UL 508 | E175199 |

### Declarations of conformity and manufacturer's declarations

| Approval | Standard | Certificate Name |
|---|---|---|
| EU-Declaration of Conformity<br>WAGO GmbH & Co. KG | - | - |
| UK-Declaration of Conformity<br>WAGO GmbH & Co. KG | - | - |

### Approvals for marine applications

| Approval | Standard | Certificate Name |
|---|---|---|
| ABS<br>American Bureau of Shipping | - | 22-2219060 |
| BSH<br>Bundesamt fuer Seeschifffahrt und Hydrographie | - | 1104 |

### Approvals for marine applications

| | | |
|---|---|---|
| BV<br>Bureau Veritas S.A. | - | 30389/C0 BV |
| DNV<br>DNV GL SE | DNV-CG-0339,Aug.2021 | TAA0000194 |
| KR<br>Korean Register of Shipping | - | KR HMB05880-AC001 |
| LR<br>Lloyds Register EMEA | - | LR22180952TA |
| PRS<br>Polski Rejestr Statków | - | TE/1101/880590/23 |
| RINA<br>RINA Germany GmbH | - | ELE343521XG001 |

 Continued on next page

## Approvals for hazardous areas

| Approval | Standard | Certificate Name |
|---|---|---|
| ATEX<br>TUEV Nord Cert GmbH | EN 60079-0 | TUEV14ATEX148929X (II 3 G Ex ec IIC T4 Gc) |
| CCCEx<br>CQST/CNEx | CNCA-C23-01 | 2020312310000213 (Ex ec IIC T4 Gc) |
| IECEx<br>TUEV Nord Cert GmbH | IEC 60079-0 | IECEx TUN 14.0035 X (Ex ec IIC T4 Gc) |
| INMETRO<br>TÜV Rheinland do Brasil Ltda. | IEC 60079-0 | TÜV 12.1297 X |
| UKEx<br>WAGO GmbH & Co. KG | EN 60079-0 | UKCA_WA GO22UKEX003X_ec |
| UL<br>Underwriters Laboratories Inc. (HAZARDOUS LOCATIONS) | UL 121201 | E198726 |

## Downloads

### Environmental Product Compliance

#### Compliance Search

Environmental Product Compliance 750-843

### Documentation

#### Manual

| | | | |
|---|---|---|---|
| Product Manual ETHERNET TCP/IP Programmable Fieldbus Controller | V 1.2.0 | pdf<br>5702.99 KB | |
| System Manual Series 750/753 | | | |

#### System Description

| | | |
|---|---|---|
| Overview on WAGO-I/O-SYSTEM 750 approvals | pdf<br>770.48 KB | |
| 750 Controller, General Product Information | pdf<br>507.50 KB | |

#### Bid Text

| | | | |
|---|---|---|---|
| 750-843 | 19.02.2019 | xml<br>6.30 KB | |
| 750-843 | 22.07.2015 | doc<br>32.50 KB | |

#### Instruction Leaflet

| | | | |
|---|---|---|---|
| CCC Ex (Additional information) | 26.04.2023 | pdf<br>159.76 KB | |


Continued on next page

## Application Notes

| Application note, other | | | |
|---|---|---|---|
| Anbindung an MCPS Datenerfassungs Software (a116400) | 1.1.1<br>20.05.2009 | zip<br>395.96 KB | |

## CAD/CAE-Data

| CAD data |
|---|
| 2D/3D Models 750-843 |

| CAE data |
|---|
| EPLAN Data Portal<br>750-843 |
| WSCAD Universe<br>750-843 |
| ZUKEN Portal 750-843 |

## Engineering-Software

| Configuration and Commissioning Software | | | |
|---|---|---|---|
| WAGO-IO-PRO Demo-Version (759-912) / Serie 750, 758 und 762 | V 2.3.9.68<br>17.02.2022 | zip<br>122524.17 KB | |
| (759-316) WAGO Ethernet Settings / Serie 750 | 06.18.01.01<br>02.09.2021 | zip<br>26678.54 KB | |

## Runtime Software

| Firmware | | | |
|---|---|---|---|
| 0750-0843, Controller ETHERNET | V 03<br>19.10.2021 | zip<br>446.20 KB | |

## Device Files

| Device Driver | | | |
|---|---|---|---|
| WAGO USB Service Kabel Treiber / Serie 750 und 857 | 6.5.3.0<br>10.09.2014 | zip<br>4721.96 KB | |

## Libraries

| Device Description File | | | |
|---|---|---|---|
| MIB-Datei für Ethernet-Controller / Serie 750 | 2.0<br>03.04.2012 | zip<br>5.99 KB | |

 Continued on next page

# 1 Compatible Products

## 1.1 Optional Accessories

### 1.1.1 Cables and connectors

#### 1.1.1.1 Connector plug

Item No.: 750-979/000-011
Connector ETHERNET; RJ-45; Cat. 6A; angled; Code T568A; AWG 22; Strain relief

Item No.: 750-979/000-021
Connector ETHERNET; RJ-45; Cat. 6A; angled; Code T568A; AWG 24; Strain relief

Item No.: 750-979/000-012
Connector ETHERNET; RJ-45; Cat. 6A; angled; Code T568B; AWG 22; Strain relief

Item No.: 750-979/000-022
Connector ETHERNET; RJ-45; Cat. 6A; angled; Code T568B; AWG 24; Strain relief

Item No.: 750-977/000-011
Connector ETHERNET; RJ-45; Cat. 6A; straight; Code T568A; AWG 22

Item No.: 750-978/000-011
Connector ETHERNET; RJ-45; Cat. 6A; straight; Code T568A; AWG 22; Strain relief

Item No.: 750-977/000-021
Connector ETHERNET; RJ-45; Cat. 6A; straight; Code T568A; AWG 24

Item No.: 750-978/000-021
Connector ETHERNET; RJ-45; Cat. 6A; straight; Code T568A; AWG 24; Strain relief

Item No.: 750-977/000-012
Connector ETHERNET; RJ-45; Cat. 6A; straight; Code T568B; AWG 22

Item No.: 750-978/000-012
Connector ETHERNET; RJ-45; Cat. 6A; straight; Code T568B; AWG 22; Strain relief

Item No.: 750-977/000-022
Connector ETHERNET; RJ-45; Cat. 6A; straight; Code T568B; AWG 24

Item No.: 750-978/000-022
Connector ETHERNET; RJ-45; Cat. 6A; straight; Code T568B; AWG 24; Strain relief

Item No.: 750-975
ETHERNET RJ-45 connector, IP20; ETHERNET 10/100 Mbit/s; for field assembly

### 1.1.2 Communication

#### 1.1.2.1 Communication cable

Item No.: 750-923
Configuration cable; USB connector; Length: 2.5 m

Item No.: 750-923/000-001
Configuration cable; USB connector; Length: 5 m

### 1.1.3 DIN-rail

#### 1.1.3.1 Mounting accessories

Item No.: 210-196
Aluminum carrier rail; 35 x 8.2 mm; 1.6 mm thick; 2 m long; unslotted; similar to EN 60715; silver-colored

Item No.: 210-198
Copper carrier rail; 35 x 15 mm; 2.3 mm thick; 2 m long; unslotted; according to EN 60715; copper-colored

Item No.: 210-508
Steel carrier rail; 35 x 15 mm; 1.5 mm thick; 2 m long; slotted; galvanized; similar to EN 60715; silver-colored

Item No.: 210-197
Steel carrier rail; 35 x 15 mm; 1.5 mm thick; 2 m long; slotted; similar to EN 60715; silver-colored

Item No.: 210-506
Steel carrier rail; 35 x 15 mm; 1.5 mm thick; 2 m long; unslotted; galvanized; similar to EN 60715; silver-colored

Item No.: 210-114
Steel carrier rail; 35 x 15 mm; 1.5 mm thick; 2 m long; unslotted; similar to EN 60715; silver-colored

Item No.: 210-118
Steel carrier rail; 35 x 15 mm; 2.3 mm thick; 2 m long; unslotted; according to EN 60715; silver-colored

Item No.: 210-115
Steel carrier rail; 35 x 7.5 mm; 1 mm thick; 2 m long; slotted; according to EN 60715; "Hole width 18 mm; silver-colored

Item No.: 210-112
Steel carrier rail; 35 x 7.5 mm; 1 mm thick; 2 m long; slotted; according to EN 60715; "Hole width 25 mm; silver-colored

Item No.: 210-504
Steel carrier rail; 35 x 7.5 mm; 1 mm thick; 2 m long; slotted; galvanized; according to EN 60715; silver-colored

Item No.: 210-113
Steel carrier rail; 35 x 7.5 mm; 1 mm thick; 2 m long; unslotted; according to EN 60715; silver-colored

Item No.: 210-505
Steel carrier rail; 35 x 7.5 mm; 1 mm thick; 2 m long; unslotted; galvanized; according to EN 60715; silver-colored

 Continued on next page

## 1.1.4 Marking

### 1.1.4.1 Group marker carrier

Item No.: 750-106
Group marker carrier

### 1.1.4.2 Marker

Item No.: 750-100
Marker card; as a DIN A4 sheet; plain

Item No.: 2009-145/000-006
Mini-WSB Inline; for Smart Printer; 1700 pieces on roll; stretchable 5 - 5.2 mm; plain; snap-on type; blue

Item No.: 2009-145/000-007
Mini-WSB Inline; for Smart Printer; 1700 pieces on roll; stretchable 5 - 5.2 mm; plain; snap-on type; gray

Item No.: 2009-145/000-023
Mini-WSB Inline; for Smart Printer; 1700 pieces on roll; stretchable 5 - 5.2 mm; plain; snap-on type; green

Item No.: 2009-145/000-012
Mini-WSB Inline; for Smart Printer; 1700 pieces on roll; stretchable 5 - 5.2 mm; plain; snap-on type; orange

Item No.: 2009-145/000-005
Mini-WSB Inline; for Smart Printer; 1700 pieces on roll; stretchable 5 - 5.2 mm; plain; snap-on type; red

Item No.: 2009-145/000-024
Mini-WSB Inline; for Smart Printer; 1700 pieces on roll; stretchable 5 - 5.2 mm; plain; snap-on type; violet

Item No.: 2009-145
Mini-WSB Inline; for Smart Printer; 1700 pieces on roll; stretchable 5 - 5.2 mm; plain; snap-on type; white

Item No.: 2009-145/000-002
Mini-WSB Inline; for Smart Printer; 1700 pieces on roll; stretchable 5 - 5.2 mm; plain; snap-on type; yellow

Item No.: 248-501/000-006
Mini-WSB marking card; as card; not stretchable; plain; snap-on type; blue

Item No.: 248-501/000-007
Mini-WSB marking card; as card; not stretchable; plain; snap-on type; gray

Item No.: 248-501/000-023
Mini-WSB marking card; as card; not stretchable; plain; snap-on type; green

Item No.: 248-501/000-017
Mini-WSB marking card; as card; not stretchable; plain; snap-on type; light green

Item No.: 248-501/000-012
Mini-WSB marking card; as card; not stretchable; plain; snap-on type; orange

Item No.: 248-501/000-005
Mini-WSB marking card; as card; not stretchable; plain; snap-on type; red

Item No.: 248-501/000-024
Mini-WSB marking card; as card; not stretchable; plain; snap-on type; violet

Item No.: 248-501
Mini-WSB marking card; as card; not stretchable; plain; snap-on type; white

Item No.: 248-501/000-002
Mini-WSB marking card; as card; not stretchable; plain; snap-on type; yellow

### 1.1.4.3 Marker carrier

Item No.: 750-103
Group marker carrier

## 1.1.5 Shield termination

### 1.1.5.1 Shield clamping saddles

Item No.: 790-108
Shield clamping saddle; 11 mm wide; diameter of compatible conductor; 3 ... 8 mm

Item No.: 790-208
Shield clamping saddle; 12.4 mm wide; 3 ... 8 mm

Item No.: 790-116
Shield clamping saddle; 19 mm wide; diameter of compatible conductor; 7 ... 16 mm

Item No.: 790-216
Shield clamping saddle; 21.8 mm wide; 6 ... 16 mm

Item No.: 790-124
Shield clamping saddle; 27 mm wide; diameter of compatible conductor; 6 ... 24 mm

Item No.: 790-220
Shield clamping saddle; 30 mm wide; 6 ... 20 mm

Item No.: 790-140
Shield clamping saddle; diameter of compatible conductor

 Continued on next page

## 1.1.6 Software

### 1.1.6.1 Basic version

Item No.: 759-333
WAGO-I/O-PRO

## 1.1.7 System enclosure

### 1.1.7.1 System enclosure

Item No.: 850-825
IP65 enclosure; Aluminium (RAL 7032); WxHxD (160x100x160 mm); 9 x M12, 4 x M20

Item No.: 850-826
IP65 enclosure; Aluminium (RAL 7032); WxHxD (240x100x160 mm); 4 x M20, 4 x M16, 14 x M12 cable grip

Item No.: 850-827
IP65 enclosure; Aluminium (RAL 7032); WxHxD (320x100x160 mm); 4 x M20, 8 x M16, 17 x M12 cable grip

Item No.: 850-828
IP65 enclosure; Aluminium (RAL 7032); WxHxD (480x100x160 mm); 4 x M20, 10 x M16, 35 x M12 cable grip

Item No.: 850-826/002-000
IP65 enclosure; Aluminium (RAL 7035); WxHxD (240x100x160 mm); 4 x M20, 4 x M16, 14 x M12 cable grip

Item No.: 850-827/002-000
IP65 enclosure; Aluminium (RAL 7035); WxHxD (320x100x160 mm); 4 x M20, 8 x M16, 17 x M12 cable grip

Item No.: 850-828/002-000
IP65 enclosure; Aluminium (RAL 7035); WxHxD (480x100x160 mm); 4 x M20, 10 x M16, 35 x M12 cable grip

Item No.: 850-834
IP65 enclosure; Polyester (RAL 7032); WxHxD (164x100x164 mm); 9 x M12, 4 x M20

Item No.: 850-835
IP65 enclosure; Polyester (RAL 7032); WxHxD (244x100x164 mm); 4 x M20, 4 x M16, 14 x M12 cable grip

Item No.: 850-836
IP65 enclosure; Polyester (RAL 7032); WxHxD (324x100x164 mm); 4 x M20, 8 x M16, 17 x M12 cable grip

Item No.: 850-814/002-000
IP65 enclosure; Sheet steel (RAL 7035); WxHxD (200x120x200 mm); without flange plate

Item No.: 850-815/002-000
IP65 enclosure; Sheet steel (RAL 7035); WxHxD (300x120x200 mm); without flange plate

Item No.: 850-816/002-000
IP65 enclosure; Sheet steel (RAL 7035); WxHxD (400x120x200 mm); without flange plate

Item No.: 850-817/002-000
IP65 enclosure; Sheet steel (RAL 7035); WxHxD (600x120x200 mm); without flange plate