High-voltage contactor

Gas-filled contactor for high-voltage DC switching

Series/Type:	**HVC43**
Ordering code:	**B88269X***
Date:	2026-04-27
Version:	10

© TDK Electronics AG 2026. Reproduction, publication and dissemination of this publication, enclosures hereto and the information contained therein without TDK Electronics' prior express consent is prohibited.

General

The HVC43 series DC contactors offer a variety of features. Our customers deploy the HVC43 series in a wide range of applications such as automotive traction battery systems, electrical energy storage systems (ESS) and DC fast charging stations.

Features

- Single coil with connector
- No coil termination
- Main terminals without polarity (bi-directional)
- RoHS compatible

Characteristics

Contact arrangement Inner contact material Internal contact gap (typ., full disconnection)	1A Cu alloy 2.0 (2 × 1.0)	 mm
Recommended connection conductor cross section [1] - for I_{th} = 150 A DC - for I_{th} = 200 A DC - for I_{th} = 250 A DC Max. allowable main terminal temperature	 ≥ 50 ≥ 60 ≥ 60 +130	 mm² mm² mm² °C
Vibration in closed state, xyz axis [2] Shock, 6 ms ½ sine, peak [3] Vibration, sine 100 … 2000 Hz, peak [4] Wideband random vibration, 10 ... 1000 Hz [5]	 588 98 49	 m/s^2 m/s^2 m/s^2 (RMS)
Operation and storage [6] Temperature Humidity Air pressure	 −40 ... +85 5 … 85 50 … 106	 °C % kPa
Utilization category IEC 60947-4-1 Pollution degree IEC 60947-1 IP level IEC 60529 Climatic category IEC 60068-1	DC-1 2 IP 40 40/085/21	
Certifications	CCC UKCA CE UL 60947-4-1 (E491412)	
Housing color	Blue	
Weight [7]	~ 300	g

[1] The recommended cross section refers to pure copper. In other cases it must be matched to actual current, conductor material properties and operation temperature
[2] Detection time 10 µs: micro-openings ≤ 10 µs may occur between main contacts
[3] Referring to IEC 60068-2-27
[4] Referring to IEC 60068-2-6
[5] Referring to IEC 60068-2-64
[6] Freezing or condensing must be avoided.
[7] Valid for base-model. Other configurations will lead to deviations.

Specification [1]

Type HVC43-…		150A	200A	250A	
Contact					
Maximum operating voltage			1000		V DC
Continuous current	I_{th}	150	200	250	A DC
Temporary overcurrent (10 min)	I_{CW1}	260	290	320	A DC
Temporary overcurrent (1 min)	I_{CW2}	440	480	540	A DC
Short circuit handling capability (5 ms) [2]			5		kA
Rated operational voltage [3, 4]	U_e		1000		V DC
Rated operational current [3, 4]	I_e		60		A DC
Contact resistance at 100 A DC					
- typical			0.125		mΩ
- max.			0.25		mΩ
Insulation resistance at 1000 V DC					
- contact to contact / contact to coil			≥ 1		GΩ
Dielectric strength [5]					
- contact to contact / contact to coil			≥ 4400		V AC
Rated impulse withstand voltage [6]	U_{imp}		8		kV
Operating time [7]					
- make			≤ 30		ms
- break			≤ 15		ms
Electrical endurance [4, 8, 9]					
Mechanical [10]					
- max. 1 V, 1 A DC (make & break)			350000		operations
Capacitive					
- at 20 V DC, 140 A DC (make)			70000		operations
Resistive					
- at 450 V DC, 200 A DC (make & break)			1000		operations
- at 450 V DC, 250 A DC (break) [11]			550		operations
Maximum cut-off [12]					
- at 450 V DC, 2000 A DC (break) [13]			1		operation
- at 1000 V DC, 450 A DC (break) [14]			1		operation

[1] The specified values apply to unused contactors acc. to IEC 61810-1.
[2] No fire or explosion after short circuit. However, the contactor may be welded and must be exchanged.
[3] Referring to IEC 60947-4-1, 6000 operations make & break
[4] Referring to IEC 60947-4-1, 50% of operations in positive and 50% in negative direction
[5] Detection limit 10 mA
[6] Referring to IEC 60947-4-1
[7] Measured at rated control voltage U_C including contact bouncing time.
[8] Specified referring to JIS C 5442 (temperature +15 °C to +35 °C, humidity 25% to 85% RH).
[9] End of life is reached when insulation resistance is < 50 MΩ at 1000 V.
[10] Duty cycle 50%, cycle duration 1 s, value represents B10 life time acc. to Weibull analysis.
[11] Testing cycle time is 0.6 s on 5.4 s off
[12] No fire and no explosion will occur after this break
[13] Tested for resistive loads with $\tau \leq 1$ ms.
[14] Tested for maximum break at 1000 V, 450 A with L = 120 µH.

Coil type [1]		12 V	24 V	
Rated control voltage (nominal)	U_c	12	24	V DC
Operating voltage range	U_1 … U_2	9 … 16	18 … 32	V DC
Pick-up voltage (max.)	U_1	9	18	V DC
Drop-out voltage (min.)		1	2	V DC
Minimum holding current		0.16	0.08	A DC
Power at nominal voltage [2]		5.8	5.8	W
Nominal resistance		24	96	Ω

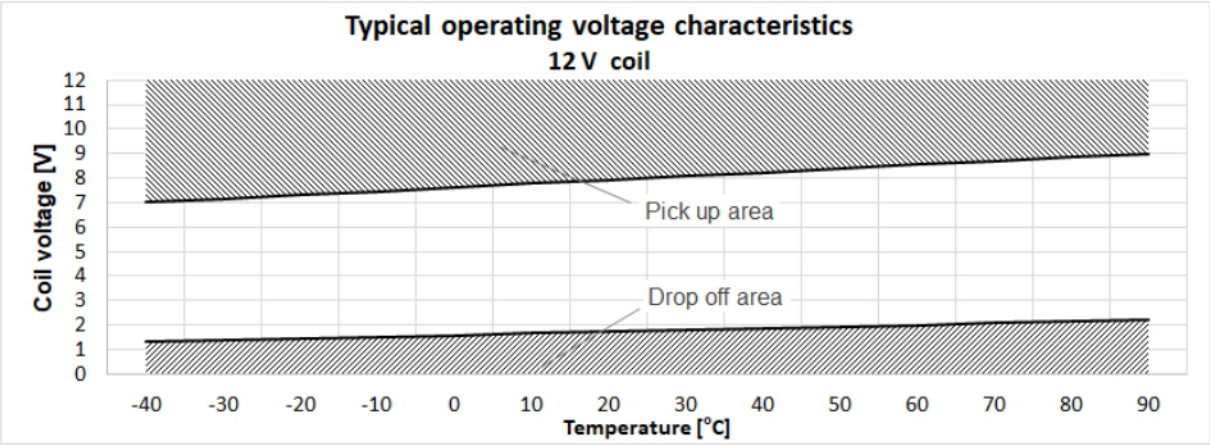

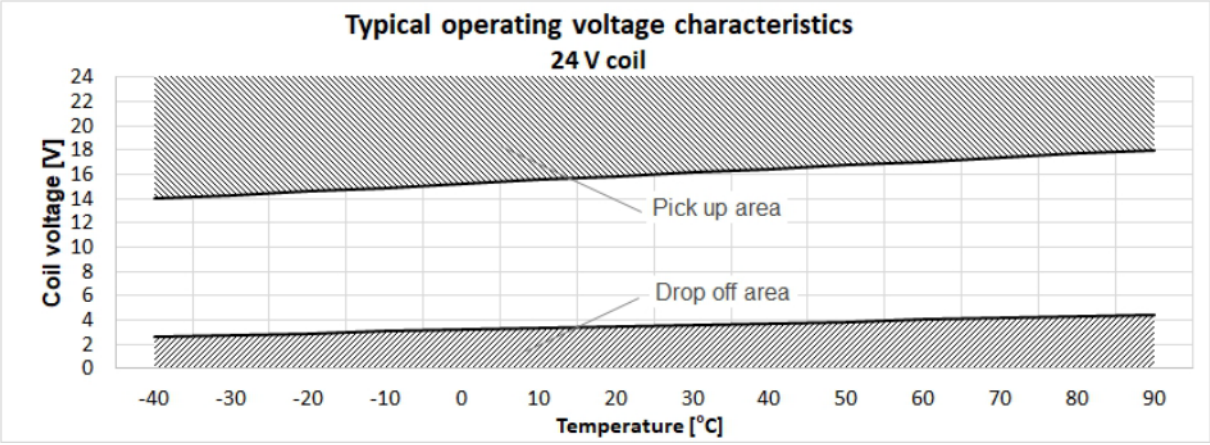

[1] Specified referring to JIS C 5442 (temperature +15 °C to +35 °C, humidity 25% to 85% RH).
[2] Tolerance ±10% at thermal equilibrium

Characteristics [1, 2, 3]

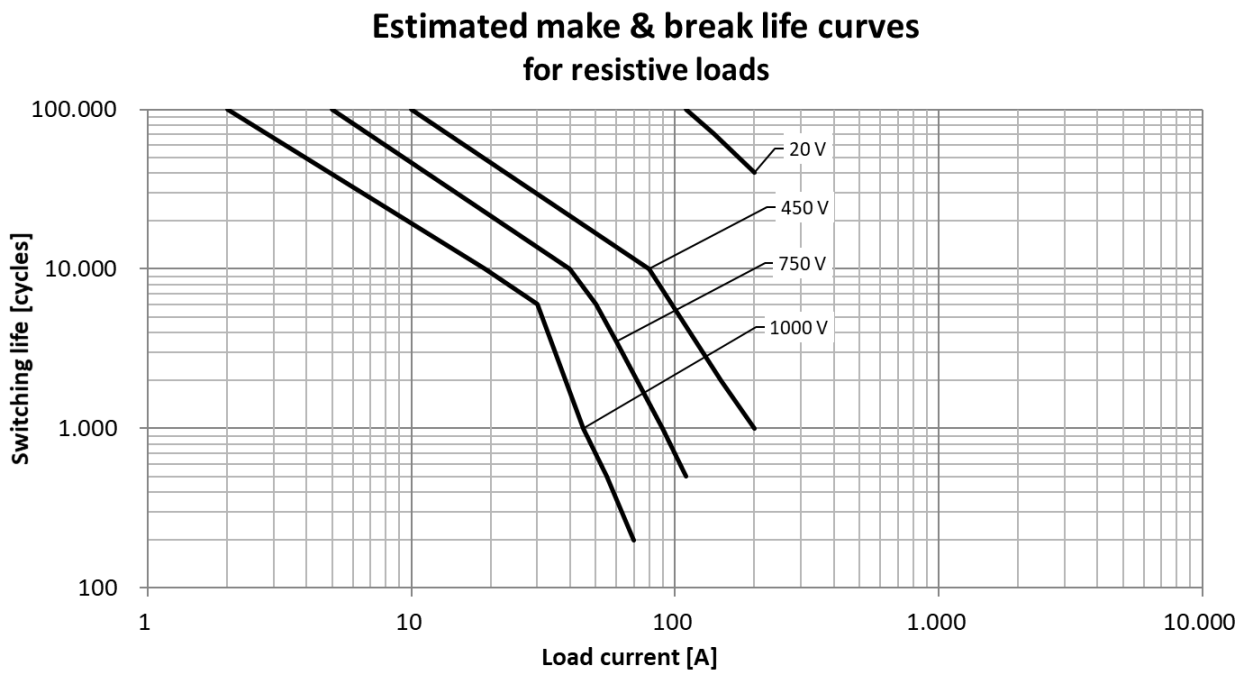

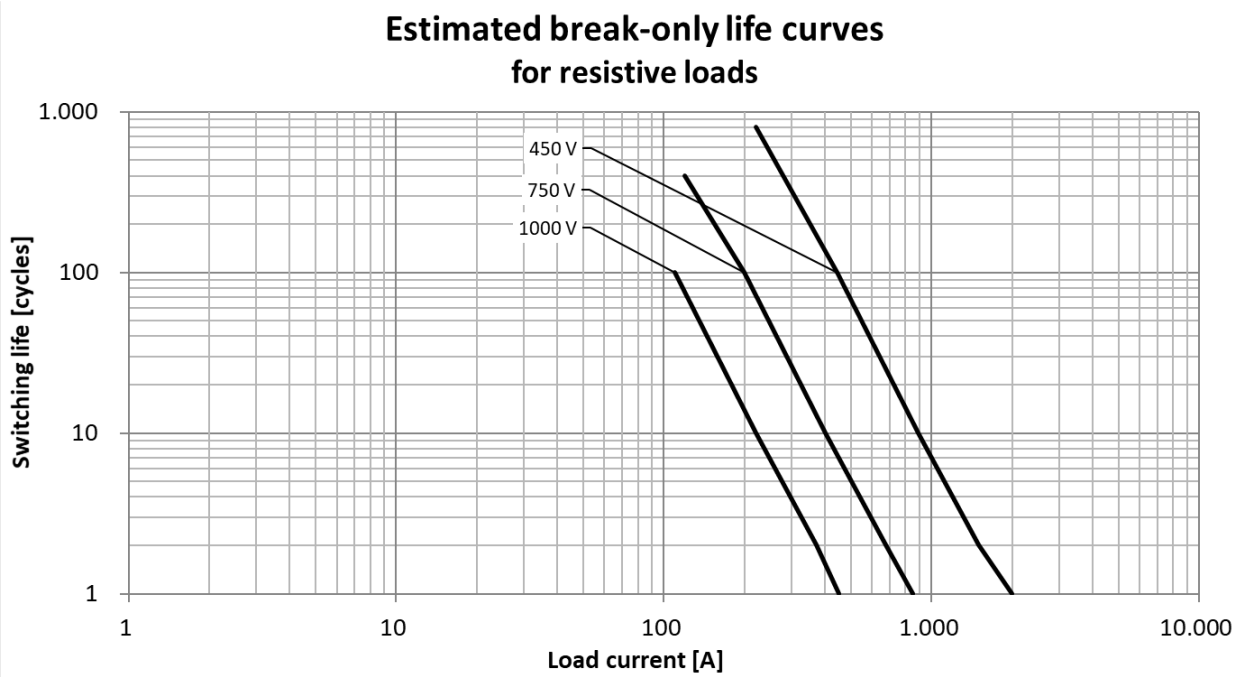

[1] Referring to IEC 60947-4-1, 50% of operations in positive and 50% in negative direction.
[2] End of life is reached when insulation resistance is < 50 MΩ at 1000 V.
[3] For “make & break life curves” duty cycle is 10%, and cycle duration is 6 s.
For “break-only life curves” duty cycle is 1%, and cycle duration is 600 s.

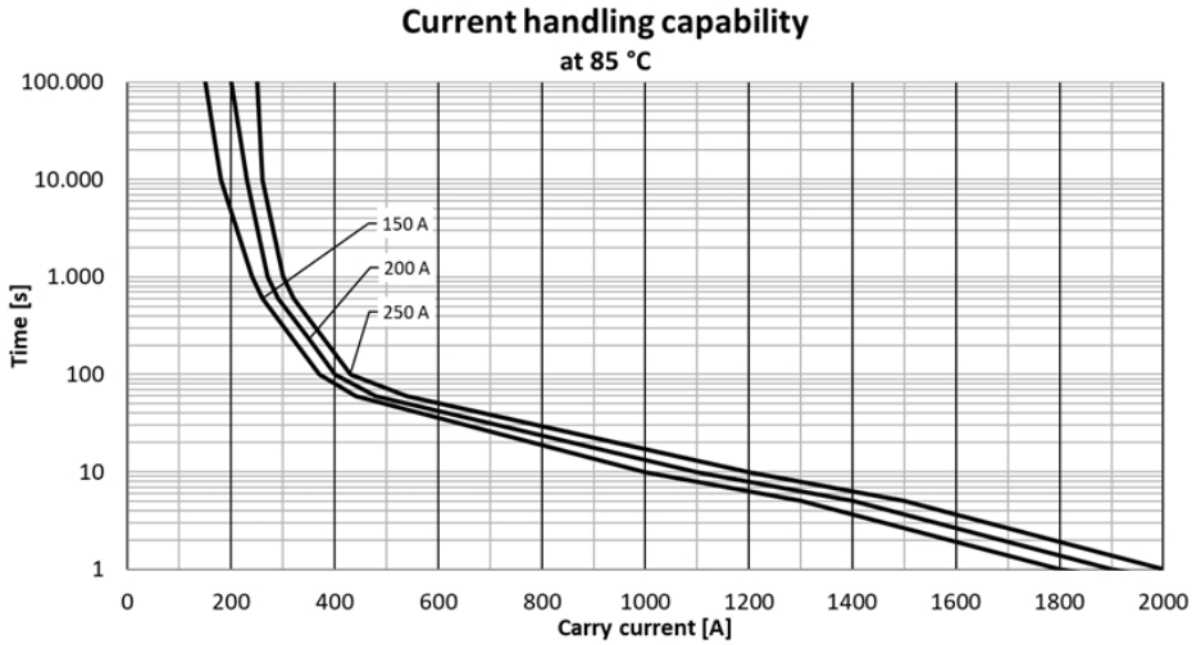
Current handling capability
at 85 °C
100.000
10.000
1.000
100
10
1
Time [s]
150 A
200 A
250 A
0
200
400
600
800
1000
1200
1400
1600
1800
2000
Carry current [A]

Dimensional drawing
in mm

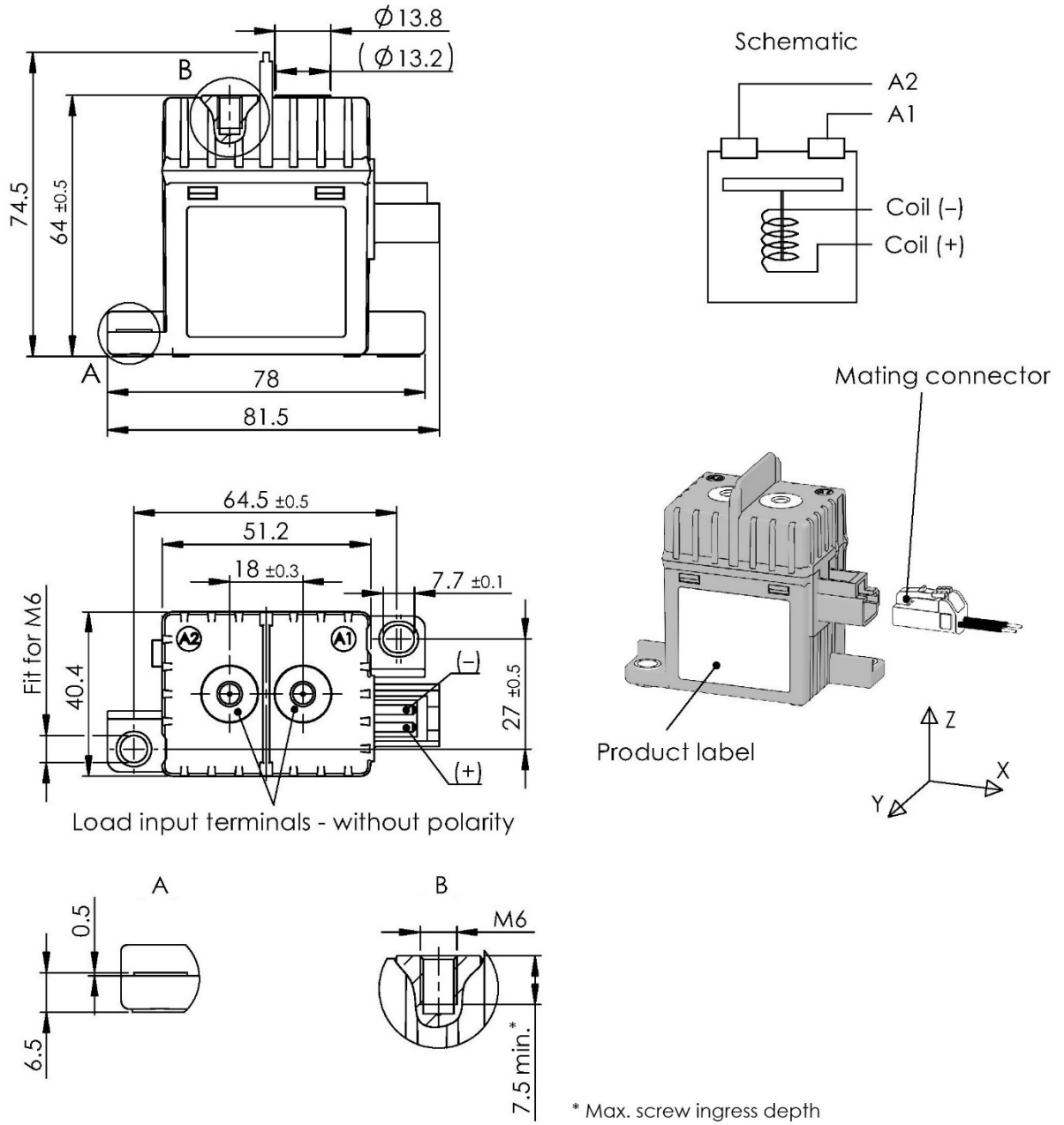

In case of no tolerance shown in dimensional drawing, general tolerances apply:
dimension ≤ 10 mm: ± 0.3 mm; dimension 10 to 50 mm: ± 0.6 mm; dimension > 50 mm: ± 1 mm

Installation information

Connection name	Type	Marking	Finishing	Remarks
A1	Main terminal	A1	Copper contact surface	Tightening torque 6…8 Nm; 7 Nm recommended
A2	Main terminal	A2		
Coil (+)	Coil terminal	None	Matching with Yazaki 7283-1020	Max. allowable pull force 10 N
Coil (–)	Coil terminal	None		
Housing mounting	Mounting hole	None	Stainless steel insert	Tightening torque 4…6 Nm

Important
Coil terminals should be suppressed with a surge protection device. Preferably a varistor with a clamping voltage not smaller than 50 V should be installed in parallel (e.g. CT1812K30G_X1 / B72580X1300K062 or equivalent).

Tightening torque (exemplary images)

A1/A2 (inner thread):
6 … 8 Nm

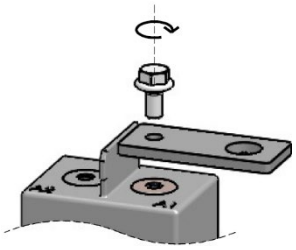

Housing mounting:
4 … 6 Nm

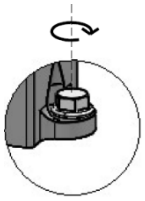

Only use torque wrench

Important

- The cable lugs or busbars to the main terminals must be securely tightened. Otherwise, current stress may generate sparks and heating. Use only suitable tightening material (screws, bolts or nuts) for all mechanical connections to the contactor and verify their functionality in the application. The torque range recommended in the data sheet is suitable for multiple fixation; the maximum torque is suited for one time fixation only (non-detachable).
- The main terminals of the contactor act as a heat sink. Please ensure that the connection surface area is fully covered with a matched cable lug or busbar and that the connection hole in the cable lug or busbar is according to DIN ISO 20273 (middle clearance).

Installation holes

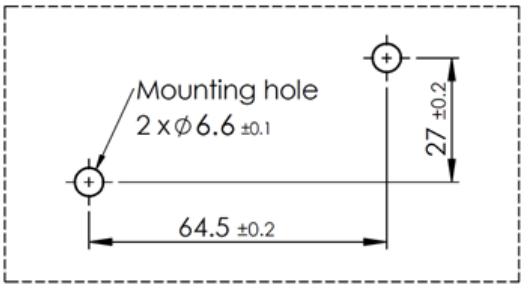

Nomenclature of type name

Example (other digits may indicate customized version or special option)

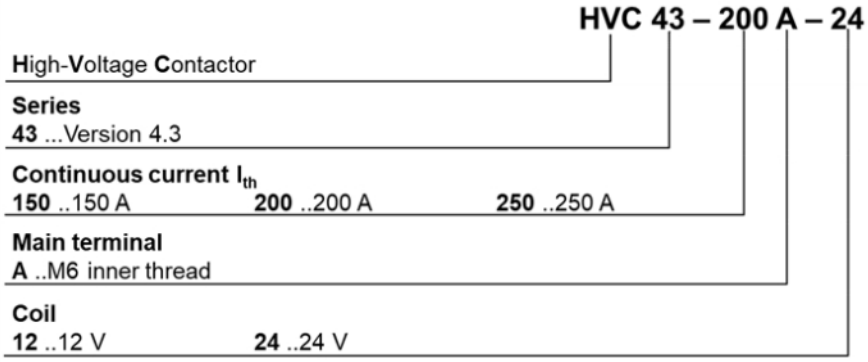

Ordering codes

Continuous current A DC	Coil voltage V DC	Type name	Ordering code *
150	12	HVC43-150A-12	B88269X3230C011 alternative B88269X3230C401
	24	HVC43-150A-24	B88269X3330C011 alternative B88269X3330C401
200	12	HVC43-200A-12	B88269X3220C011 alternative B88269X3220C401
	24	HVC43-200A-24	B88269X3340C011 alternative B88269X3340C401
250	12	HVC43-250A-12	B88269X3210C011 alternative B88269X3210C401
	24	HVC43-250A-24	B88269X3350C011 alternative B88269X3350C401

* The ordering code can be followed by a three-digit internal suffix.

Packing unit

*B88269X…**C011** = 1 pc. in cardboard box*

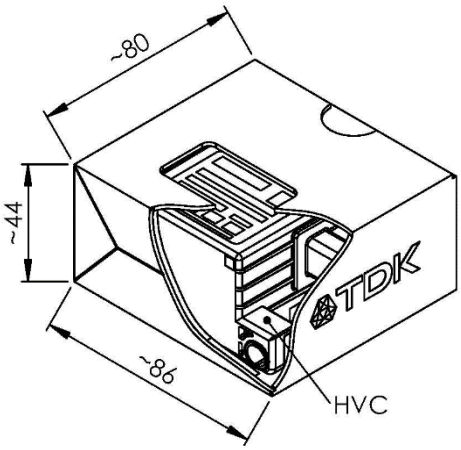

Delivery unit

10 pcs. in cardboard box

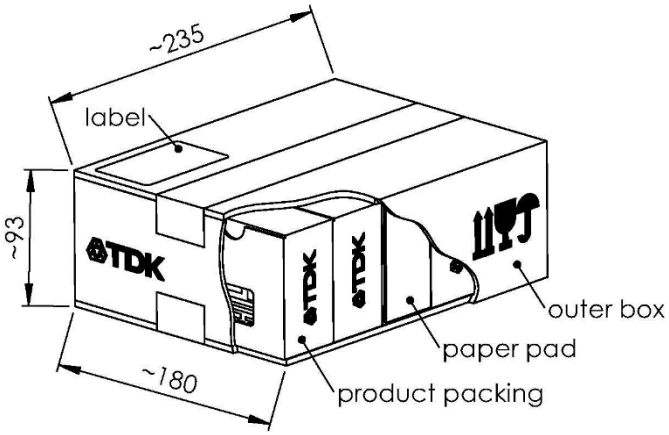

Alternative packing unit

*B88269X…**C401** = 40 pcs. in cardboard box*

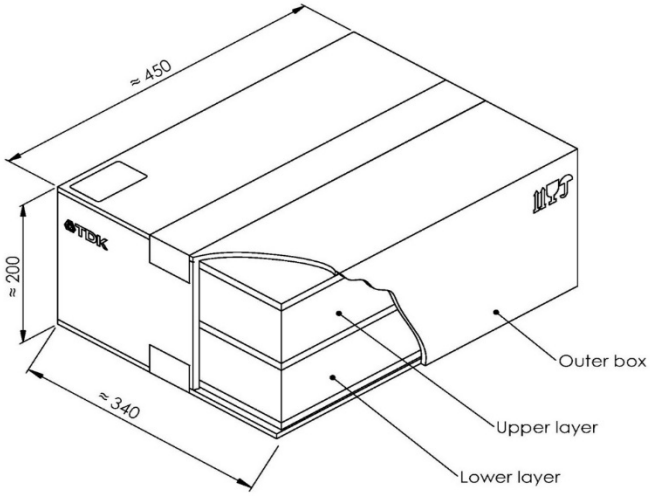

Accessory

Mating connector plug (similar to Yazaki 7283-1020)

To order if required:

Order code **B88269X9990C101** = 10 pcs. or **B88269X9990C102** = 100 pcs.in a box

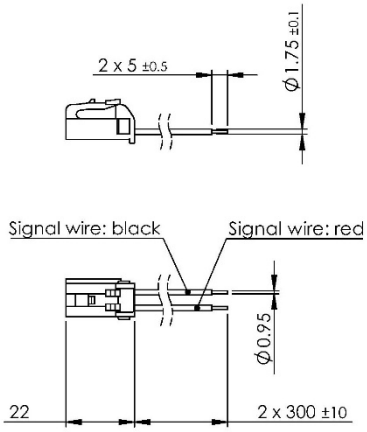

2.3II(090II) Connector (Yazaki - 7283-1020)	
Connection name	Wire
Coil (+)	Red
Coil (–)	Black

Wire type: UL AWM3266 20AWG TS

Cautions and warnings

- It is not allowed to use the contactor outside of the parameter range specified in this data sheet. This also includes temperature and humidity. Overloading may destroy the component.
- It must be ensured that during usage, storage or transportation, direct sunlight is avoided. The ambient temperature during usage must not exceed the value specified in this data sheet.
- This contactor is not waterproof.
- The manufacturer cannot be held liable for failures caused by condensation or icing. The customer must apply suitable measures to avoid these circumstances.
- It is forbidden to use this contactor in atmospheres loaded with organic solvents (alcohol, petroleum, etc.) or strong alkaline substances (ammoniac, acids in general, etc.).
- We strongly recommend implementing redundancy, taking measures to prevent the spread of fire, taking the possibilities of malfunction into account and performing regular maintenance.
- Contactors must be handled with care and must not be dropped.
- Contactors radiate magnetic and electromagnetic fields. Please ensure that other components mounted in proximity are not affected.
- This contactor is classified according to UL as an open-type device. This means that the contactor is intended to be installed in an ultimate enclosure provided by a third party. Furthermore, the contactor coil circuit is intended to be powered with a Class 2 source.
- The contactor must be mounted onto a flat surface using the designated fixation holes in addition to the cable lugs or busbars attached to the main connection terminals. It is not allowed to mount the contactor using only busbars.
- The contactor must be mounted in a way that the vertical axis of the part (Z-axis) is not in line with the main shock axis of the application. Still, it must be mounted either upright standing or horizontal lying on either side. Upside down mounting must be avoided. Only the original mounting holes are allowed to be used to mount the contactor.
- In case two contactors are mounted in proximity, a clearance distance of 10 mm must be kept.
- It is forbidden to attach any kind of additional construction to or on the contactor.
- During installation and operation of the contactor, it must be ensured that no foreign matter adheres to the main connection terminals. Especially oils and silicones must be avoided.
- Attached wires and plugs are not allowed to be used for lifting and handling the contactor (maximum allowed pull-force is 10 N).
- The wires on the low voltage side of the contactor (coil supply and auxiliary contact where applicable) need to be routed away from the high voltage side connections (e.g. busbars) to avoid possible signal faults on the low voltage side.
- It is required to always use a suitable backup fuse for the contactor.
- Contactors may become hot during extended periods of current overload (burn hazard).
- Switching capacitive loads can lead to high inrush currents and can cause welding of the main connections (tack-welding). These inrush currents need to be limited as much as possible. Even short inrush currents in the microsecond range can lead to tack-welding. Please ensure with appropriate pre-charging that the differential voltage across the main terminals is as low as possible when closing the contactor. Any connected capacitances should be pre-charged to a minimum of 98% (5 time constants).

- In the event of a break under inductive load, the voltage at the connection terminals must not exceed the nominal operating voltage by more than 10%. Break of inductive loads with time constant greater than 1 ms will shorten the lifetime. Failure may also occur.
- The contactor is bi-directional (no polarity of main connections). The service life is estimated based on the requirements of IEC 60947-4-1 Chapter 8.2.4, where 50% of the operations are performed in positive direction and 50% in negative direction.
- After long-term operation, the contactor coil resistance is increased due to the temperature rise. If the contactor is switched on immediately afterwards, the coil characteristics may deteriorate.
- In the event of a current exceeding the maximum breaking current by more than 50% or triggering a series fuse, the contactor must be considered damaged and replaced.
- The lifetime depends on several factors like e.g. load type, driving circuit and ambient conditions. We recommend checking the performance of the contactor under actual conditions.
- Simultaneously applied maximum operation parameters for e.g. coil voltage, overcurrent, temperature, vibration etc. may lead to reduced lifetime. We recommend applying rated settings to achieve optimum life performance.
- The contactor must not be operated without any load. This may increase contact resistance.
- The operating life of the contactor can be affected by strong magnetic fields. Please ensure that there are no magnetic field sources in proximity and avoid nearby installed heat sources.
- We recommend separating or shielding the low voltage side (coil and auxiliary connections if available) from the high voltage side (main connection terminals).
- The coil input voltage needs to be kept stable and without disturbances. It should always remain above the minimum value of the coil voltage operation range specified in the datasheet.
- For a successful pick-up, the coil voltage cannot be ramped up slowly. It needs to be applied instantly (within less than 1 ms) to at least the maximum pick-up voltage. For a successful breaking, the coil voltage cannot be ramped down slowly. It needs to be switched off instantly (within less than 1 ms).
- The contactor is not intended to be used with pulse width modulation (PWM) controllers. Please contact TDK for details.
- To protect the coil contacts from overvoltage when switching off, a protection device needs to be installed in parallel to the coil.

Display of ordering codes for TDK Electronics products

The ordering code for one and the same product can be represented differently in data sheets, data books, other publications, on the company website, or in order-related documents such as shipping notes, order confirmations and product labels. **The varying representations of the ordering codes are due to different processes employed and do not affect the specifications of the respective products**. Detailed information can be found on the Internet under www.tdk-electronics.tdk.com/orderingcodes.

Important notes

The following applies to all products named in this publication:

1. Some parts of this publication contain **statements about the suitability of our products for certain areas of application**. These statements are based on our knowledge of typical requirements that are often placed on our products in the areas of application concerned. We nevertheless expressly point out **that such statements cannot be regarded as binding statements about the suitability of our products for a particular customer application.** As a rule we are either unfamiliar with individual customer applications or less familiar with them than the customers themselves. For these reasons, it is always ultimately incumbent on the customer to check and decide whether a product with the properties described in the product specification is suitable for use in a particular customer application.
2. We also point out that **in individual cases, a malfunction of electronic components or failure before the end of their usual service life cannot be completely ruled out in the current state of the art, even if they are operated as specified.** In customer applications requiring a very high level of operational safety and especially in customer applications in which the malfunction or failure of an electronic component could endanger human life or health (e.g. in accident prevention or life-saving systems), it must therefore be ensured by means of suitable design of the customer application or other action taken by the customer (e.g. installation of protective circuitry or redundancy) that no injury or damage is sustained by third parties in the event of malfunction or failure of an electronic component.
3. **The warnings, cautions and product-specific notes must be observed.**
4. In order to satisfy certain technical requirements, **some of the products described in this publication may contain substances subject to restrictions in certain jurisdictions (e.g. because they are classed as hazardous)**. Useful information on this will be found in our Material Data Sheets on the Internet (www.tdk-electronics.tdk.com/material). Should you have any more detailed questions, please contact our sales offices.
5. We constantly strive to improve our products. Consequently, **the products described in this publication may change from time to time**. The same is true of the corresponding product specifications. Please check therefore to what extent product descriptions and specifications contained in this publication are still applicable before or when you place an order. .

   We also **reserve the right to discontinue production and delivery of products**. Consequently, we cannot guarantee that all products named in this publication will always be available. The aforementioned does not apply in the case of individual agreements deviating from the foregoing for customer-specific products.
6. Unless otherwise agreed in individual contracts, **all orders are subject to our General Terms and Conditions of Supply.**
7. **Our manufacturing sites serving the automotive business apply the IATF 16949 standard.** The IATF certifications confirm our compliance with requirements regarding the quality management system in the automotive industry. Referring to customer requirements and customer specific requirements (“CSR”) TDK always has and will continue to have the policy of respecting individual agreements. Even if IATF 16949 may appear to support the acceptance of unilateral requirements, we hereby like to emphasize that **only requirements mutually agreed upon can and will be implemented in our Quality Management System.** For clarification purposes we like to point out that obligations from IATF 16949 shall only become legally binding if individually agreed upon.

Important notes

8. The trade names EPCOS, CarXield, CeraCharge, CeraDiode, CeraLink, CeraPad, CeraPlas, CSMP, CTVS, DeltaCap, DigiSiMic, FilterCap, FormFit, InsuGate, LeaXield, MediPlas, MiniBlue, MiniCell, MKD, MKK, ModCap, MotorCap, PCC, PhaseCap, PhaseCube, PhaseMod, PhiCap, PiezoBrush, PlasmaBrush, PowerHap, PQSine, PQvar, SIFERRIT, SIFI, SIKOREL, SilverCap, SIMDAD, SiMic, SIMID, SineFormer, SIOV, SurfIND, ThermoFuse, WindCap, XieldCap are **trademarks registered or pending** in Europe and in other countries. Further information will be found on the Internet at www.tdk-electronics.tdk.com/trademarks.

Release 2024-02