DATASHEET

SMD ▪ Middle Power LED

67-22S/G2C-D1525L4L82934Z6/2T

Features

- PLCC-2 package
- Top view Green LED
- Wide viewing angle
- Pb-free
- RoHS compliant

Description

The Everlight 67-22S package has high efficacy, Middle power consumption, wide viewing angle and a compact form factor. These features make this package an ideal LED for all lighting applications.

Applications

- Decorative and Entertainment Lighting
- Agriculture Lighting
- General use

Copyright © 2016, Everlight All Rights Reserved. Release Date: 15.Jul. 2016. Issue No:V7
Issue No:DSE-0011103 Ver.:7 Release Date:09/26/2022 狀態:Approved(正式發行)

Device Selection Guide

Chip Materials	Emitted Color	Resin Color
InGaN	Green	Water Clear

Absolute Maximum Ratings ($T_{Soldering}$=25℃)

Parameter	Symbol	Rating	Unit
Forward Current	I_F	60	mA
Peak Forward Current (Duty 1/10 @10ms)	I_{FP}	100	mA
Power Dissipation	P_d	230	mW
Operating Temperature	T_{opr}	-40 ~ +85	℃
Storage Temperature	T_{stg}	-40 ~ +100	℃
Thermal Resistance (Junction / Soldering point)	$R_{th\ J\text{-}S}$	50	℃/W
Junction Temperature	T_j	115	℃
Soldering Temperature	T_{sol}	Reflow Soldering : 260 ℃ for 10 sec. Hand Soldering : 350 ℃ for 3 sec.	

Note:
The products are sensitive to static electricity and must be carefully taken when handling products

Electro-Optical Characteristics ($T_{Soldering}$=25℃)

Parameter	Symbol	Min.	Typ.	Max.	Unit	Condition
Luminous flux	Iv	13.0	-----	18.0	lm	I_F=60mA
Forward Voltage	V_F	2.9	-----	3.4	V	I_F=60mA
Viewing Angle	$2\theta_{1/2}$	-----	120	-----	deg	I_F=60mA
Reverse Current	IR	-----	-----	50	μA	V_R =5V

Notes:
1. Tolerance of Luminous flux : ±11%.
2. Tolerance of Forward Voltage: ±0.1V.

Copyright © 2016, Everlight All Rights Reserved. Release Date: 15.Jul. 2016. Issue No:V7
Issue No:DSE-0011103 Ver.:7 Release Date:09/26/2022 狀態:Approved(正式發行)

Bin Range of Luminous flux

Bin Code	Min.	Max.	Unit	Condition
L4	13.0	14.0	lm	I_F=60mA
L5	14.0	15.0		
L6	15.0	16.0		
L7	16.0	17.0		
L8	17.0	18.0		

Notes:
Tolerance of Luminous flux: ±11%

Bin Range of Forward Voltage

Bin Code	Min.	Max.	Unit	Condition
36	2.9	3.0	V	I_F=60mA
37	3.0	3.1		
38	3.1	3.2		
39	3.2	3.3		
40	3.3	3.4		

Note:
Tolerance of Forward Voltage: ±0.1V.

Dominant Wavelength Bins

Bin Code	Min.	Max.	Unit	Condition
G51	515	520	nm	I_F=60mA
G52	520	525		

Notes:
Dominant / Peak wavelength measurement tolerance: ±1nm.

Copyright © 2016, Everlight All Rights Reserved. Release Date: 15.Jul. 2016. Issue No:V7
Issue No:DSE-0011103 Ver.:7 Release Date:09/26/2022 狀態:Approved(正式發行)

Spectrum Distribution

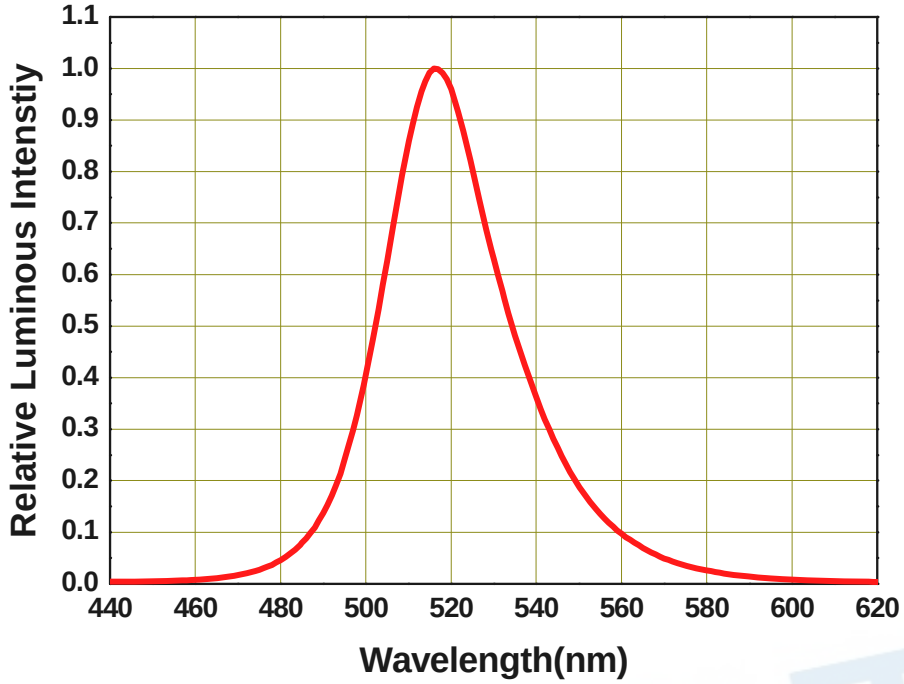

Typical Electro-Optical Characteristics Curves

Fig.1 – Forward Voltage Shift vs. Junction Temperature

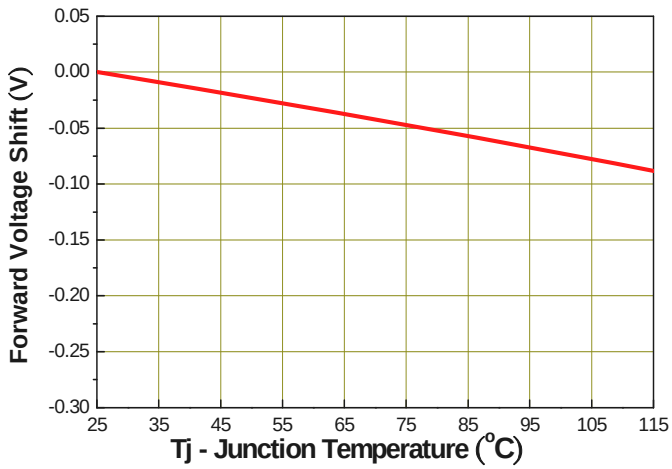

Fig.2 - Relative Radiometric Power vs. Forward Current

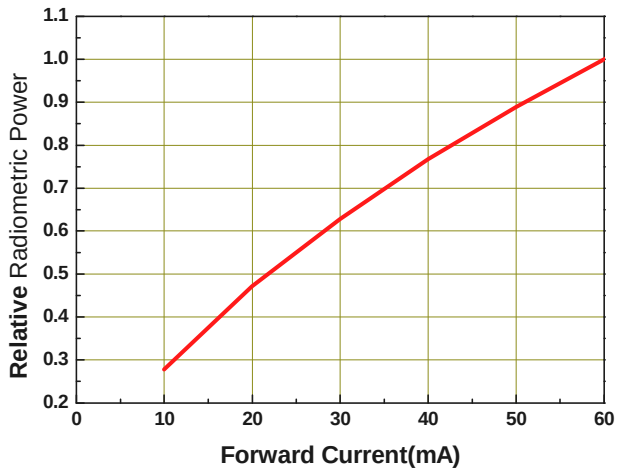

Copyright © 2016, Everlight All Rights Reserved. Release Date: 15.Jul. 2016. Issue No:V7
Issue No:DSE-0011103 Ver.:7 Release Date:09/26/2022 狀態:Approved(正式發行)

Typical Electro-Optical Characteristics Curves

Fig.3 - Relative Luminous Intensity vs. Junction Temperature

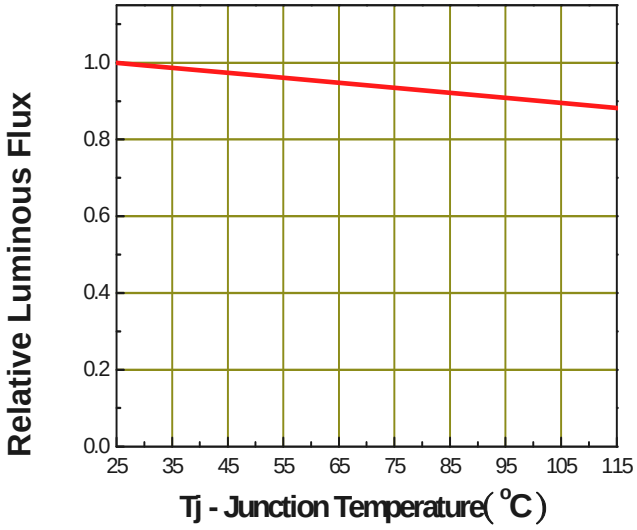

Fig.4 - Forward Current vs. Forward Voltage

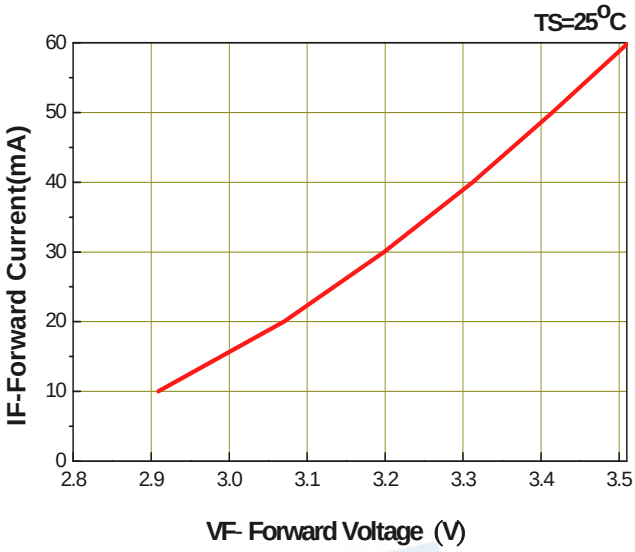

Fig.5 – Max. Driving Forward Current vs. Soldering Temperature

Rth j-s=50 ° C/W

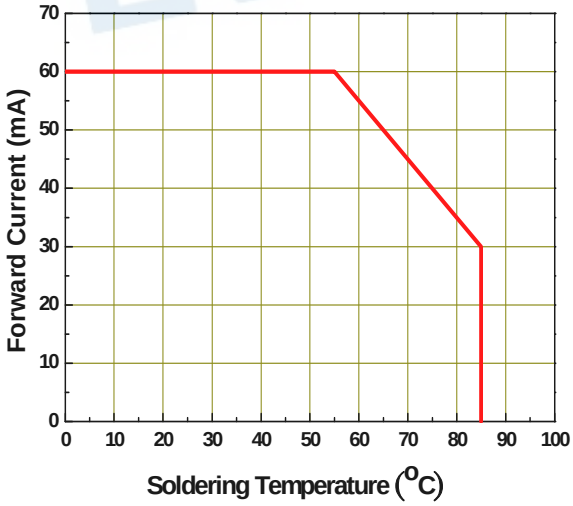

Fig.6 – Radiation Diagram

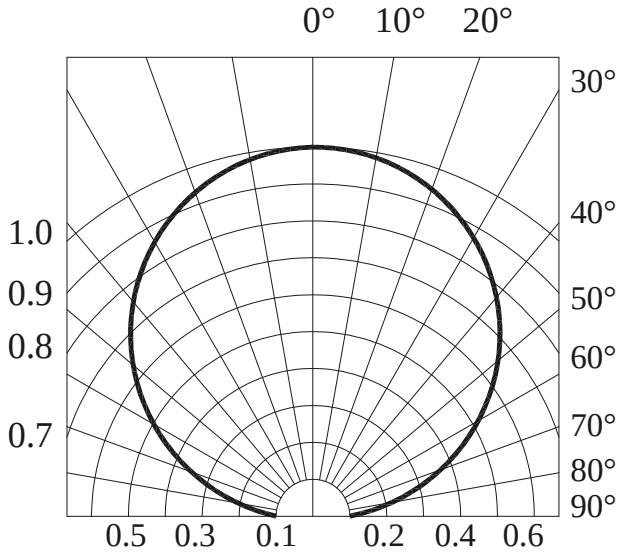

Copyright © 2016, Everlight All Rights Reserved. Release Date: 15.Jul. 2016. Issue No:V7
Issue No:DSE-0011103 Ver.:7 Release Date:09/26/2022 状態:Approved(正式發行)

Package Dimension

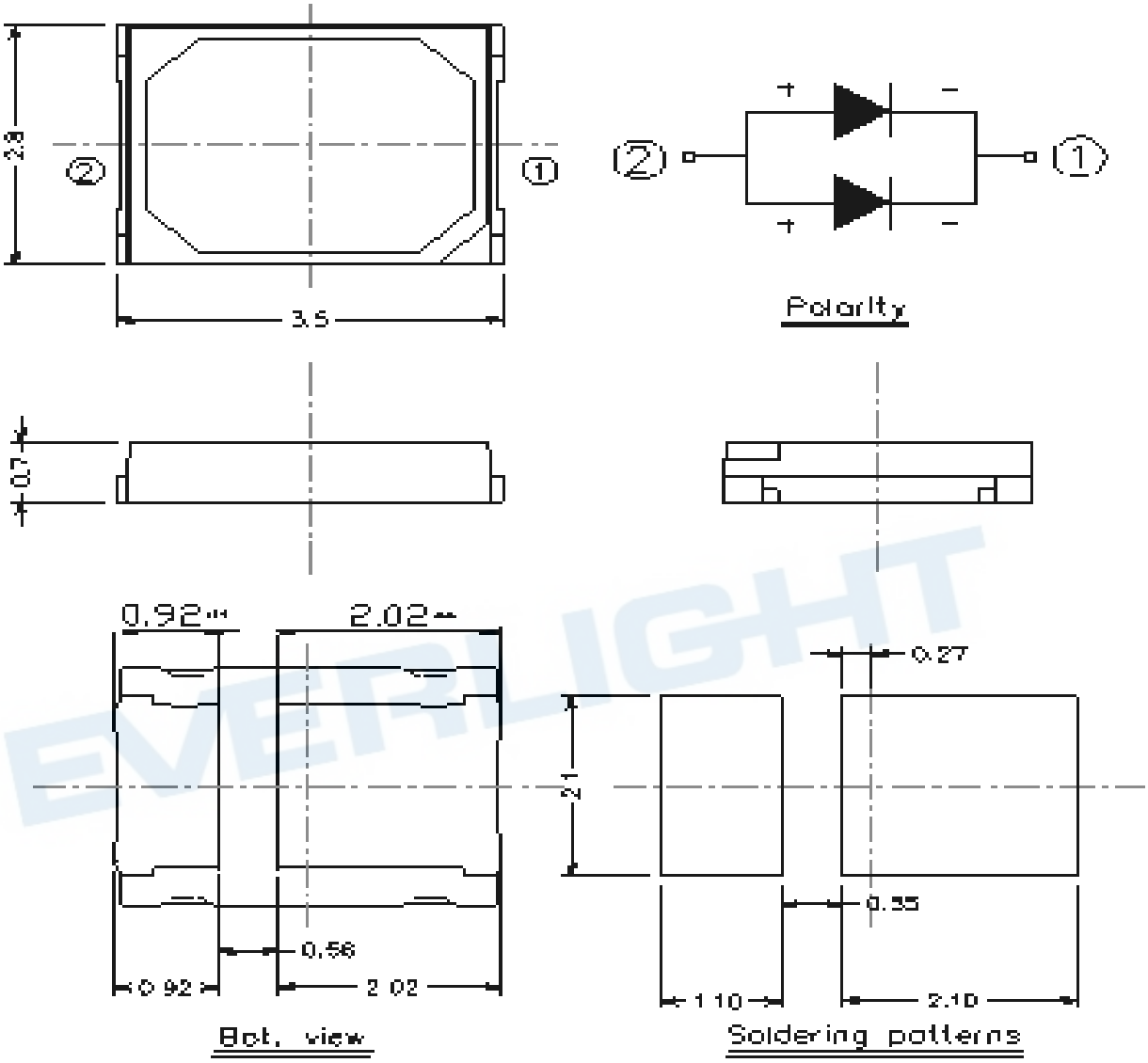

Note:
Tolerance unless mentioned is ±0.15mm; Unit = mm

Copyright © 2016, Everlight All Rights Reserved. Release Date: 15.Jul. 2016. Issue No:V7
Issue No:DSE-0011103 Ver.:7 Release Date:09/26/2022 狀態:Approved(正式發行)

Moisture Resistant Packing Materials

Label Explanation

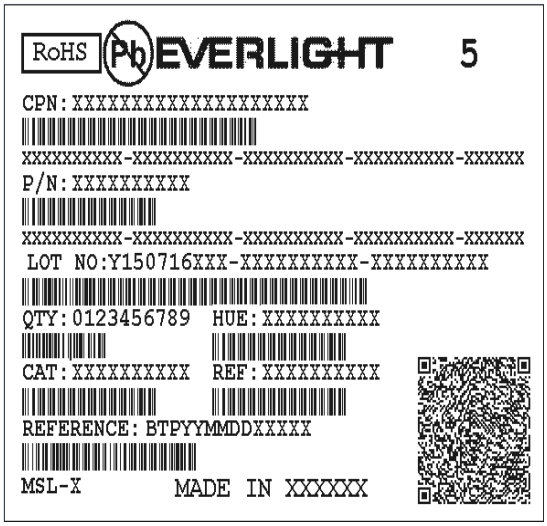

- CPN: Customer's Product Number
- P/N: Product Number
- QTY: Packing Quantity
- CAT: Luminous Intensity Rank
- HUE: Dom. Wavelength Rank
- REF: Forward Voltage Rank
- LOT No: Lot Number

Reel Dimensions

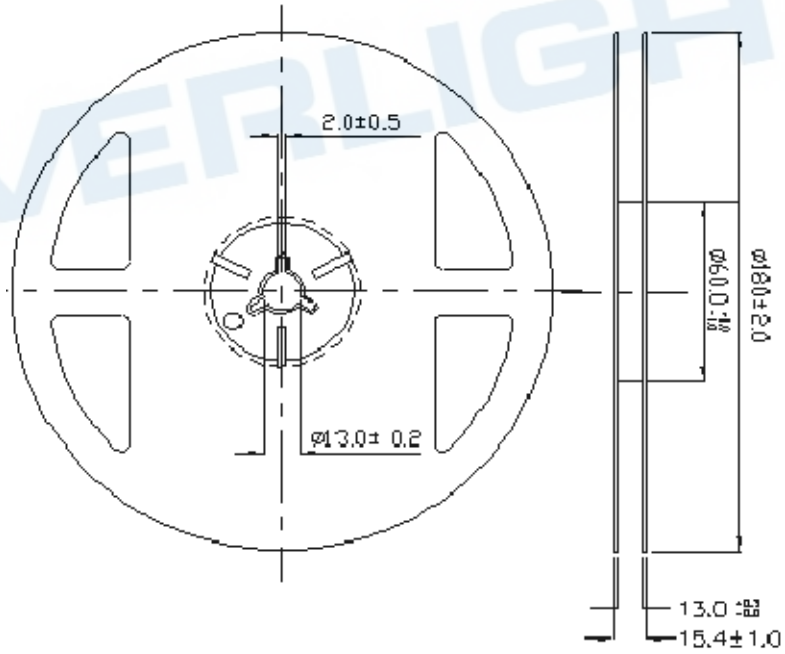

Note:
Tolerances unless mentioned ±0.1mm. Unit = mm

Copyright © 2016, Everlight All Rights Reserved. Release Date: 15.Jul. 2016. Issue No:V7
Issue No:DSE-0011103 Ver.:7 Release Date:09/26/2022 状態:Approved(正式發行)

Carrier Tape Dimensions: Loaded Quantity 4000 pcs. Per Reel

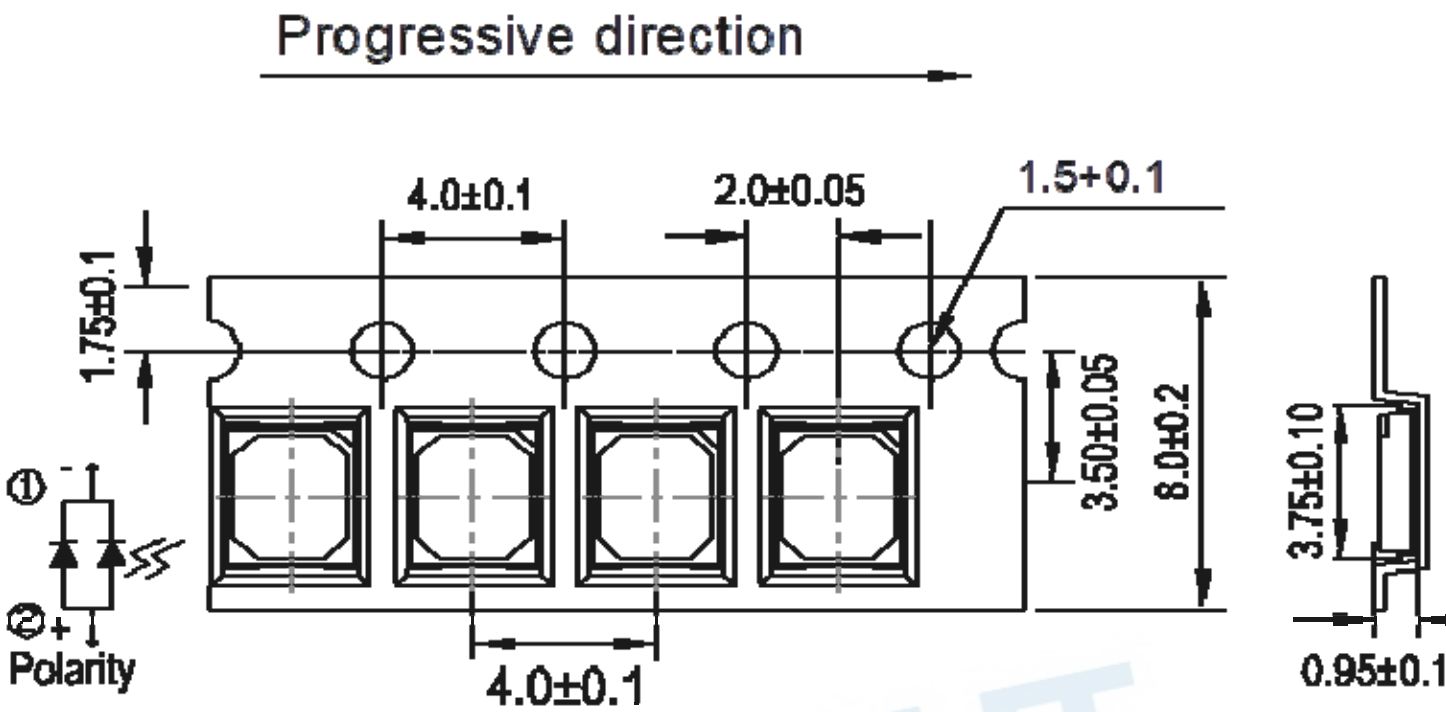

Note:
Tolerance unless mentioned is ±0.1mm; Unit = mm

Moisture Resistant Packing Process

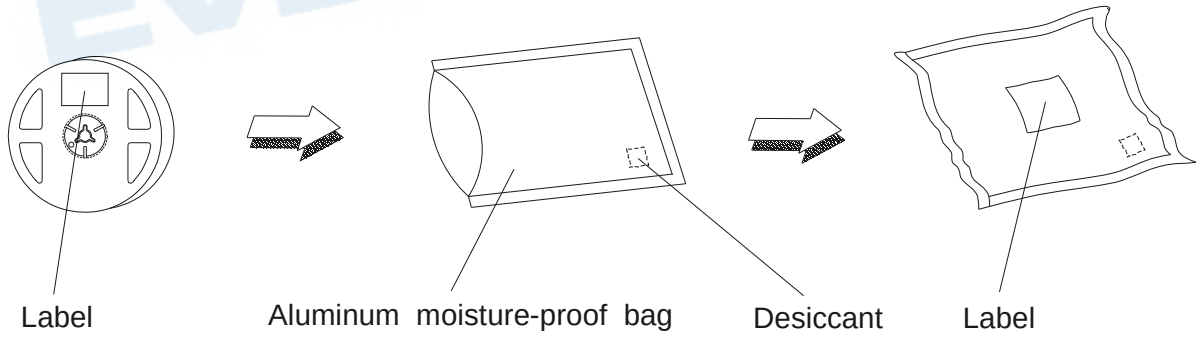

Copyright © 2016, Everlight All Rights Reserved. Release Date: 15.Jul. 2016. Issue No:V7
Issue No:DSE-0011103 Ver.:7 Release Date:09/26/2022 狀態:Approved(正式發行)

Reliability Test Items and Conditions

The reliability of products shall be satisfied with items listed below.
Confidence level：90%
LTPD：10%

No.	Items	Test Condition	Test Hours/Cycles	Sample Size	Ac/Re
1	Reflow Soldering	Temp. : 260℃/10sec.	6 Min.	22 PCS.	0/1
2	Thermal Shock	H : +100℃ 20min ∫ 10 sec L : -10℃ 20min	200 Cycles	22 PCS.	0/1
3	Temperature Cycle	H : +100℃ 30min ∫ 5 min L : -40℃ 30min	200 Cycles	22 PCS.	0/1
4	High Temperature/Humidity Storage	Ta=85℃,85%RH	1000 Hrs.	22 PCS.	0/1
5	High Temperature/Humidity Operation	Ta=85℃,85%RH, I_F = 30mA	1000 Hrs.	22 PCS.	0/1
6	Low Temperature Storage	Ta=-40℃	1000 Hrs.	22 PCS.	0/1
7	High Temperature Storage	Ta=85℃	1000 Hrs.	22 PCS.	0/1
8	Low Temperature Operation Life	Ta=-40℃, I_F = 60 mA	1000 Hrs.	22 PCS.	0/1
9	High Temperature Operation/ Life#1	Ta=25℃, I_F = 60 mA	1000 Hrs.	22 PCS.	0/1
10	High Temperature Operation/ Life#2	Ta=55℃, I_F =60mA	1000 Hrs.	22 PCS.	0/1
11	High Temperature Operation/ Life#3	Ta=85℃, I_F = 30 mA	1000 Hrs.	22 PCS.	0/1

Copyright © 2016, Everlight All Rights Reserved. Release Date: 15.Jul. 2016. Issue No:V7
Issue No:DSE-0011103 Ver.:7 Release Date:09/26/2022 狀態:Approved(正式發行)

Precautions for Use

1. Over-current-proof
   Customer must apply resistors for protection; otherwise slight voltage shift will cause big current change (Burn out will happen).
2. Storage
   2.1 Do not open moisture proof bag before the products are ready to use.
   2.2 Before opening the package: The LEDs should be kept at 30℃ or less and 90%RH or less.
   2.3 After opening the package: The LED's floor life is 168 Hrs under 30℃ or less and 60% RH or less. If unused LEDs remain, it should be stored in moisture proof packages.
   2.4 If the moisture absorbent material (silica gel) has faded away or the LEDs have exceeded the storage time, baking treatment should be performed using the following conditions.
   Baking treatment: 60±5℃ for 24 hours.
3. Soldering Condition
   3.1 Pb-free solder temperature profile

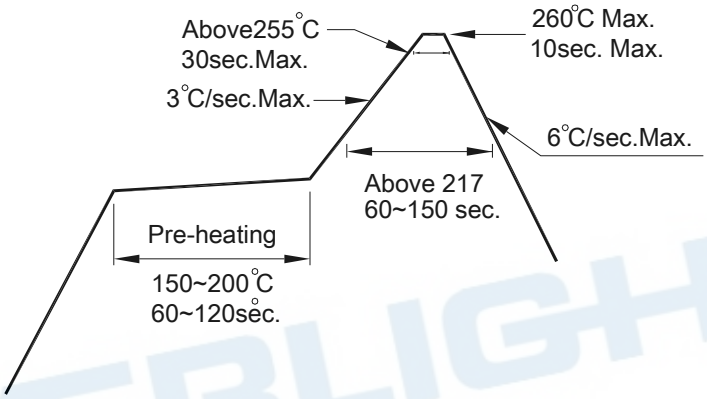

   3.2 Reflow soldering should not be done more than two times.
   3.3 When soldering, do not put stress on the LEDs during heating.
   3.4 After soldering, do not warp the circuit board.
4. Soldering Iron
   Each terminal is to go to the tip of soldering iron temperature less than 350℃ for 3 seconds within once in less than the soldering iron capacity 25W. Leave two seconds and more intervals, and do soldering of each terminal. Be careful because the damage of the product is often started at the time of the hand solder.
5. Repairing
   Repair should not be done after the LEDs have been soldered. When repairing is unavoidable, a double-head soldering iron should be used (as below figure). It should be confirmed beforehand whether the characteristics of the LEDs will or will not be damaged by repairing.

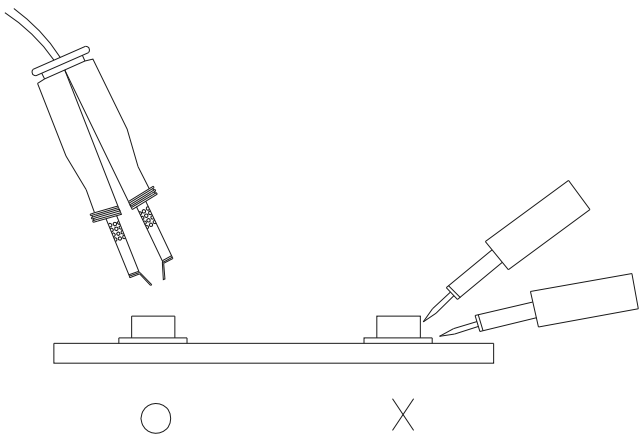

Copyright © 2016, Everlight All Rights Reserved. Release Date: 15.Jul. 2016. Issue No:V7
Issue No:DSE-0011103 Ver.:7 Release Date:09/26/2022 状態:Approved(正式發行)