# POWER SUPPLY–CHARGER EGN45

## High quality plug-in power supply–charger USB-C PD





### FEATURES:

- compact design, low weight
- high energy efficiency
- high user safety
- compliant with LVD, EMC, ErP, RoHS
- low no-load power consumption

### APPLICATIONS:

- Consumer electronics: smartphones, tablets, laptops
- Telecommunications equipment
- Electronic office equipment
- Other devices powered/charged via USB-C

The **EGN-45PD-UC6** power adapters/chargers are designed for consumer electronics applications, serving as power sources and chargers for laptops, smartphones, tablets, and similar devices. They are distinguished by high build quality and excellent electrical parameters — including low ripple and noise, superior regulation, and a high level of user safety (such as low leakage current and breakdown-resistant insulation) — as well as high energy conversion efficiency. Their design utilizes high-quality electronic components that ensure reliable, continuous operation over the long term. These power supplies are dependable, fully protected, and stable. The units comply with LVD and EMC directives and Ecodesign requirements, and they come with a 5-year warranty.

5 YEARS WARRANTY

### TECHNICAL SPECIFICATION

| Group | Parametr name | EGN-45PD-UC6 | Conditions |
|---|---|---|---|
| Input | Rated input voltage | 100–240 VAC | |
| | Input voltage range | 90–264 VAC | |
| | Mains frequency range | 50–60 Hz | |
| | AC current (max.) | 1.0 A | At 100 VAC |
| | Inrush current (max.) | 90 A | At 240 VAC |
| | No load power consumption | 100 mW | |
| | Input leakage current (max.) | 0.1 mA | At 240 VAC |
| | Power factor correction | 0.50 | |
| Output | Rated output voltages | Coarse settings: 5 V, 9 V, 12 V, 15 V and 20 V<br>Fine PPS: 3.3 – 11 V/3 A, 3.3 – 21 V/2.25 A | |
| | Rated output current | 3 A (for range 5 V ... 15 V), 2.25 A for 20 V | |
| | Rated output power (for voltage range) | 15 W (5 V), 27 W (9 V), 36 W (12 V),<br>45 W (15 V), 45 W (20 V) | |
| | Energy efficiency | 83,5% for 5 V, 90% for 20 V | At 230 VAC |
| | Energy conversion efficiency at 10% load | 83% for 5 V, 85% for 20 V | |
| | Line regulation | ±2% | |
| | Load regulation | ±5% (5 V), ±3% (20 V) | |
| | Ripples and noise | 150 mVp-p (5 V), 200 mVp-p (20 V) | |
| | Output voltage hold time (max) | 5 ms | At 100 VAC |
| | Output voltage rise (max) | 30 ms | At 100 VAC |
| | DC voltage rise time (max.) | 1 s | At 100 VAC |
| Environmental | Working temperature range | –5 to +30°C | |
| | Working humidity range | 35% to 85% RH | At 40°C |
| | Storage temperature range | –20°C to +70°C | |
| | Cooling method | Free air circulation | Convection cooling |
| Protection | Input: overvoltage (OVP), undervoltage (UVP) | OVP, UVP | |
| | Output: overcurrent (OCP), short circuit (SCP),<br>overvoltage (OVP) | OCP typ. 3.6 A (for 5 V ... 15 V)<br>OCP typ. 2.8 A (for 20 V)<br>SCP, OVP | |
| | Transient voltage protection | Yes | |
| | Thermal switch | Yes | Built into controller |
| | Automatic recovery on fault remove | Yes | |
| Safety and EMC | Withstand isolation voltage (min.) | 3 kVAC | Input to output, 5 mA, 1 min |
| | Isolation resistance (min.) | 100 MΩ | 500 VDC |
| | Isolation class | 2 | Reinforced isolation |
| | Safety compliance | EN62368-1:2020+A11:2020 | |
| | EMC compliance | EN55032 class B<br>EN61000-4-2 (8/6 kV), -4-4 i -4-5 (1 kV) | |
| | Marking | CE, UKCA, RoHS<br>DoE Level VI, ErP | |

| | | | |
|---|---|---|---|
| Mechanical and features | Enclosure type | Black ABS plastic, IP20 | |
| | Dimensions | 36 × 36 × 40 mm | See picture below |
| | Weight | 73 g | |
| | Output connector | USB Type C socket | |
| | Input connector | EU plug | |
| | Related accesories | USB-C to USB-C cable | 1.5 m |
| | Package size | 95 × 45 × 50 mm | |
| | Manufacturing | China | |
| | Warranty | 5 years | |
| | MTBF | 20 000 hours | At 25°C |
| | EAN | 5904139616130 | |

**Notes:** Unless otherwise stated, all parameters are specified at 230 VAC input voltage, 50 Hz, ambient temperature 25°C and relative humidity 70% for rated load output. The parameters related to the output voltage regulation are measured from low to high line or for load changes from 0 to 100%, respectively. The power supply is considered as an independent unit, but the final equipment still need to reconfirm that the whole system complies with the EMC directives. If the PSU is installed in the final device as a subassembly, the tests should be repeated to verify that the system has been met compliance.

## BLOCK DIAGRAM

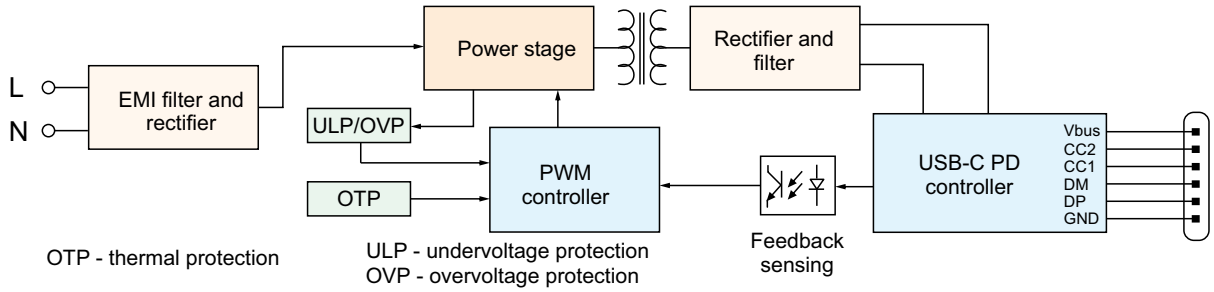


## MECHANICAL SPECIFICATION

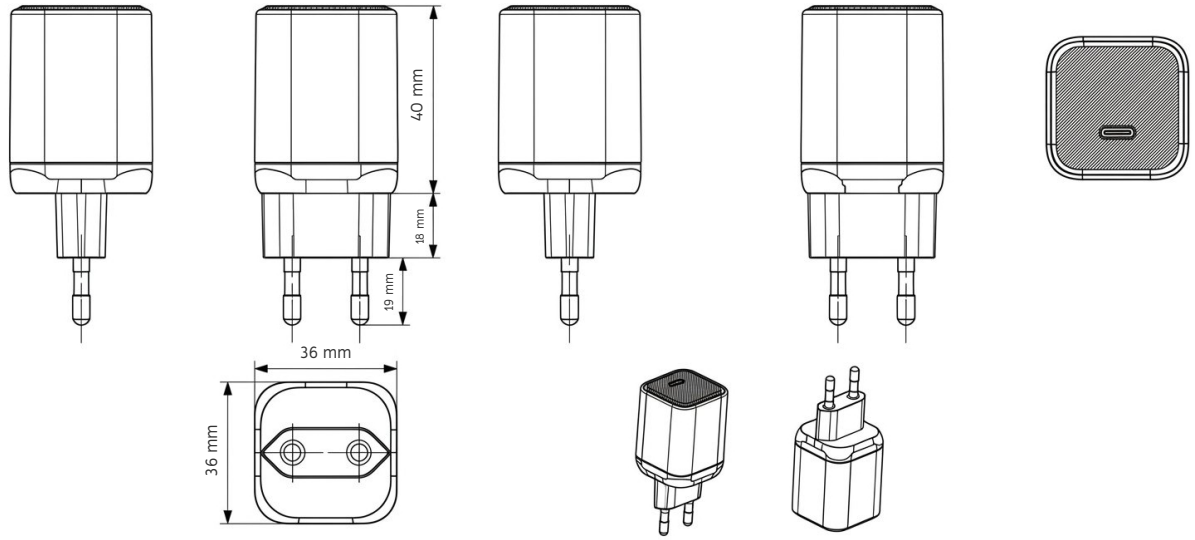


## PRODUCT LABEL

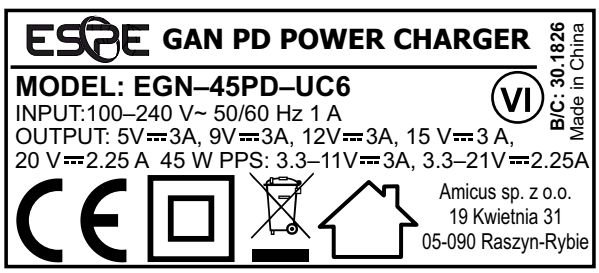


**Legend to the label icons:**

- II safety class: no grounding is required, no dangerous voltage even in an emergency situation will appear on output
- power supply intended for indoor use only
- high efficiency supply with small power consumption at no load, meeting requirements of 6th level rating Energy Star Compliance and European ErP regulations
- the product must not be disposed of in normal waste containers

Relase: 2026–10–15