Transfer or duplication of this document as well as the utilisation or communication of its content are not permitted unless express consent is granted. Violations give rise to claims for damages. All rights reserved in case of patent, utility model or design patent registrations.
Tolerance specifications do not include clearances inherent in the design.

Weitergabe sowie Vervielfältigung dieses Dokuments, Verwertung und Mitteilung seines Inhalts sind verboten, soweit nicht ausdrücklich gestattet. Zuwiderhandlungen verpflichten zu Schadenersatz. Alle Rechte für den Fall der Patent-, Gebrauchsmuster- oder Designeintragung vorbehalten.
Bauartbedingtes Spiel ist in den Toleranzangaben nicht berücksichtigt.

COVER

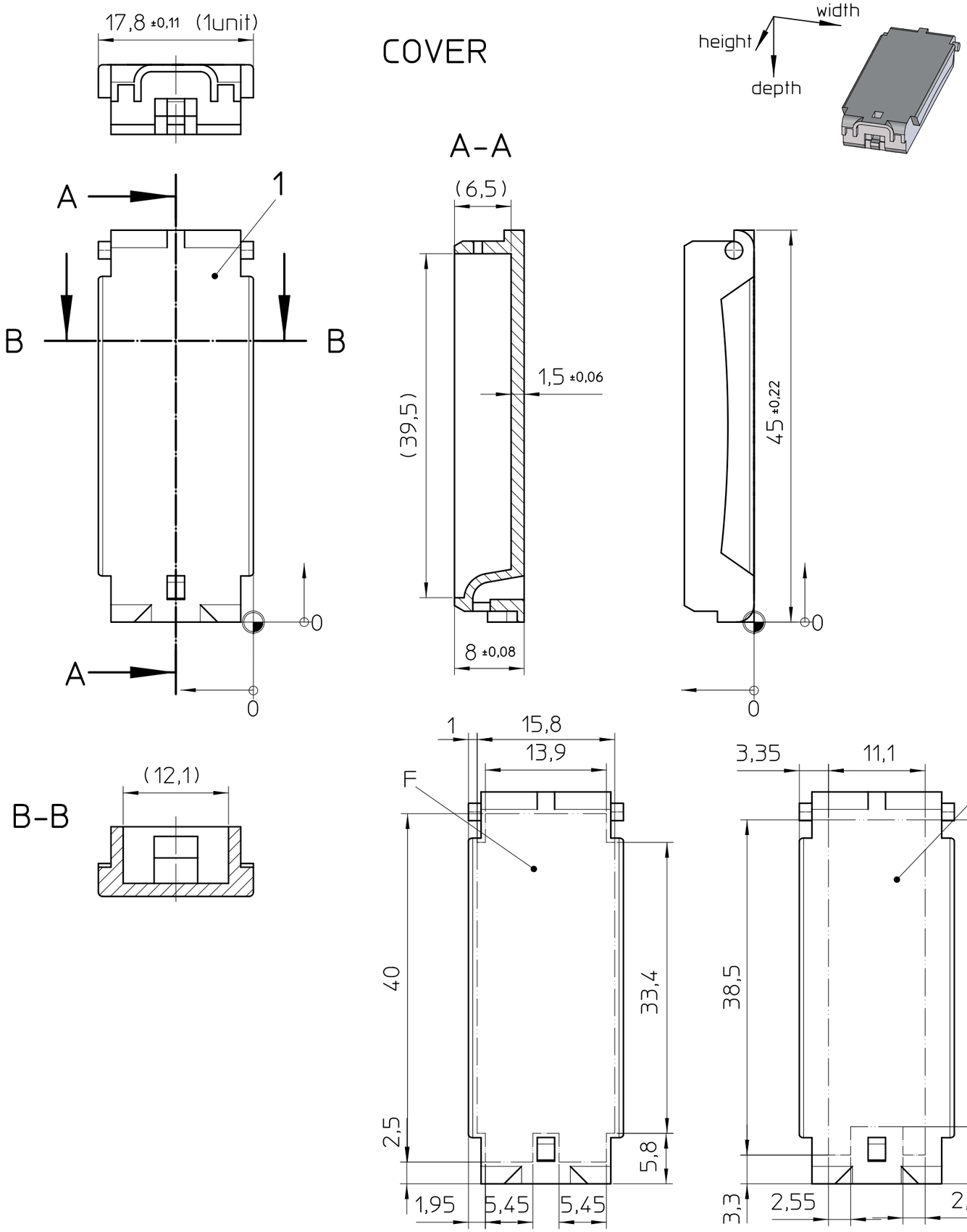

Assembly example

Overall dimensions complaint DIN 43880

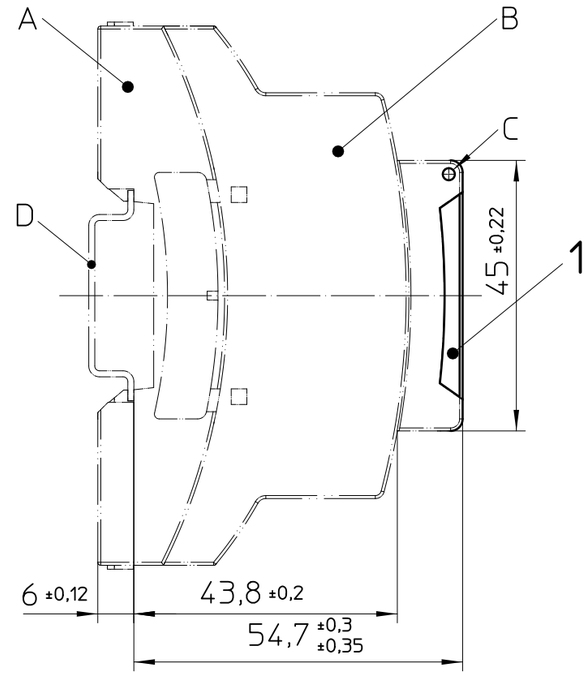

General Information:
- Simplified representation, exemplary shown in gray.
- Tolerances apply in a normal climate according to DIN EN ISO 291-23/50-2
- ⊕ Workpiece zero point for mechanical processing
- Tolerances for mechanical processing are ISO 2768-mK
- Tolerances for printing DIN ISO 2768-m
- Machining radii min. R1, further on request
- Web: www.phoenixcontact.com webcode: #0311

Additional Information:
A. Housing lower part BC 17,8 UT HBUS...
B. Housing upper part BC 17,8 OT...
C. pivot point
D. Mounting rail like EN 60715: TH 35-7,5 or mounting rail TH 35-15x1,5 similar to EN 60715
E. Hole for sealing
F. Marking area
G. Machining area

Pos.	QTY	Description	Material
1	1	COVER	PC

DIN A3	document-no. / ri: 00937047 / 03	article-no.: 2200045	scale: 2:1
PHOENIX CONTACT	date: 01.10.2024	document-type: TECDOC 2D_Productdrawing	- Simplified representation - Document excluded from change process - Linear dimensions [mm]
page 1 of 1	description: BC 17,8 DKL S KMGY		