Bellows suction cups (round)

FSG 4 NBR-ESD-55 M5-IG

Część nr..:10.01.06.04331

https://www.schmalz.com/10.01.06.04331

Strona główna > Technologia podciśnienia w automatyce > Komponenty podciśnieniowe > Przyssawki podciśnieniowe > Przyssawki mieszkowe (okrągłe) > Bellows Suction Cups FSG (2.5 Folds) > FSG 4 NBR-ESD-55 M5-IG

Bellows suction cup (round) for very uneven workpieces



- Size: 4
- Suction cup material: Nitrile rubber NBR-dissipative
- Material hardness [Shore A]: 55 Shore A
- Nipple material: Aluminum
- Connection: M5-F
- Number of folds: 2,5
- Vacuum connection: M5-F

Dane projektowe

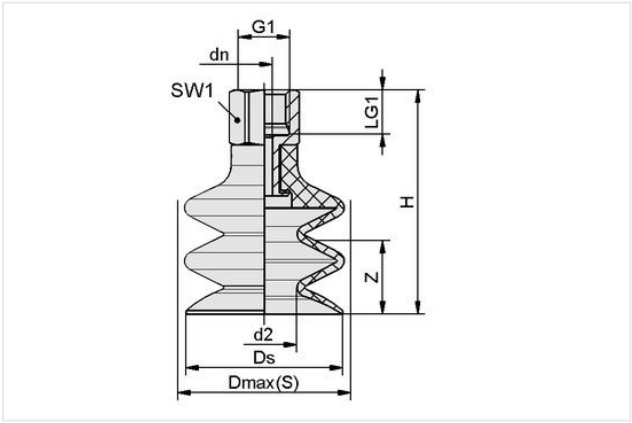

Atrybut	Wartość
d2	2,40 mm
dn	2 mm
Dmax(S)	5,50 mm
Ds	3,80 mm
G1	M5-F
H	24 mm
LG1	5,50 mm
SW1	8 mm
Z (Stroke)	1,50 mm

Note: Acceptable dimensional tolerances for elastomer parts concerning to DIN ISO 3302-1 M3

Dane techniczne

Atrybut	Wartość
Suction cup material	Nitrile rubber NBR-dissipative
Material hardness [Shore A]	55 Shore A
Size	4
Number of folds	2,50
Connection	M5-IG
Curve radius (min) (convex)	4 mm
Volume	0,05 cm^3

Kontakt z firmą Schmalz
Schmalz Sp.z.o.o. | ul. Fabianowska 131/A1, 62-052 Komorniki, Poland | +48 61 628 67 70 | schmalz@schmalz.pl

Bellows suction cups (round)

FSG 4 NBR-ESD-55 M5-IG

Część nr..:10.01.06.04331

https://www.schmalz.com/10.01.06.04331

Suction force (-600mbar)	0,27 N
Pull-off force	0,60 N
Hose diameter (empf.) d	2 mm
Weight	1,80 g
Product family	FSG

Note: Suction force: The specified suction forces are theoretical values at a vacuum of -0.6 bar and with a dry, smooth and flat workpiece surface - they do not include a safety factor Pull-off force: The pull-off force of the versions made of natural rubber is reduced by about 40% Hose diameter: The recommended hose diameter refers to a hose length of approx. 2 m

Części zamienne



FG 4 NBR-ESD-55 N017

Część nr..:10.01.06.04138

Size: 4
Suction cup material: Nitrile rubber NBR-ESD
Material hardness [Shore A]: 55 Shore A
Number of folds: 2,5



SA-NIP N017 M5-IG DN200

Część nr..:10.01.06.00313

Thread G1: M5-F
Fitting length: 10 mm
Material: Aluminum