Bellows suction cup (round)

SPB4 20 SI-55 G1/8-IG

Część nr..:10.01.06.03517

https://www.schmalz.com/10.01.06.03517

Bellows suction cup (round) for very uneven workpieces



- Size: 20
- Suction cup material: Silicone SI
- Material hardness [Shore A]: 55 Shore A
- Thread G1: G1/8"-F
- Number of folds: 4,5

Dane projektowe

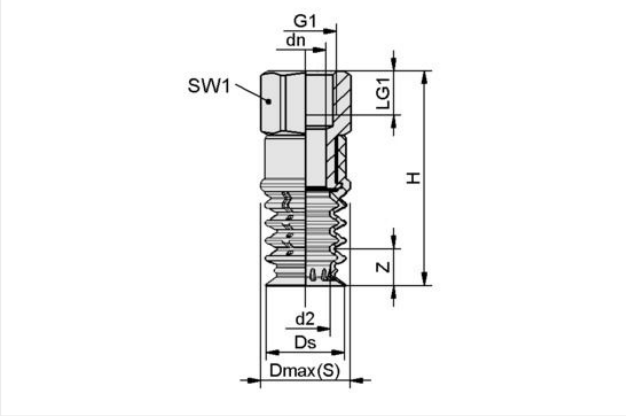

Atrybut	Wartość
d2	13,50 mm
dn	8,60 mm
Dmax(S)	24,40 mm
Ds	21,40 mm
G1	G1/8"-F
H	58,40 mm
LG1	12 mm
SW1	22 mm
Z (Stroke)	10 mm

Dane techniczne

Atrybut	Wartość
Suction force (-600mbar)	8 N
Pull-off force	11 N
Volume	7,90 cm³
Hose diameter (empf.) d	9 mm
Number of folds	4,50
Suction cup material	Silicone SI
Material hardness [Shore A]	55 Shore A
Size	20

Kontakt z firmą Schmalz
Schmalz Sp.z.o.o. | ul. Fabianowska 131/A1, 62-052 Komorniki, Poland | +48 61 628 67 70 | schmalz@schmalz.pl

Bellows suction cup (round)

SPB4 20 SI-55 G1/8-IG

Część nr..:10.01.06.03517

https://www.schmalz.com/10.01.06.03517

Weight	32,30 g
Product family	SPB4

Akcesoria



SIEB 17x0.8 MS-A2 103 0.103/0.07

Część nr..:10.07.01.00320

External diameter D: 17 mm
Length L: 0,8 mm
Material: Brass / Stainless steel
Filter pore size: 103 µm



SSB 16-27 ST-VZ

Część nr..:10.07.10.00002

Clamping range: 16.0 ... 27.0 mm
Material: Steel
Surface: galvanised

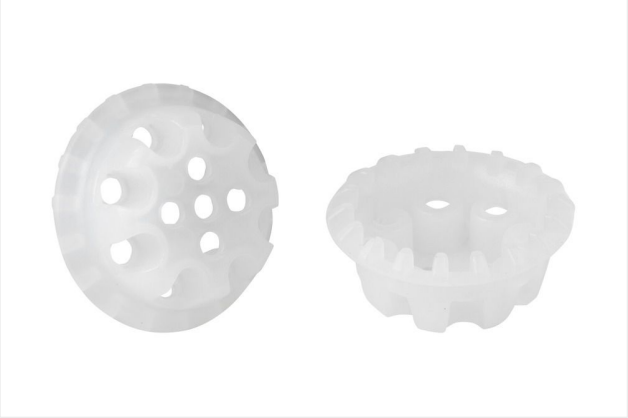

SPI 16 PE SPB4-20

Część nr..:10.01.06.02915

Size: 16
Material: Polyethylene
Use: SPB4-20

Bellows suction cup (round)

SPB4 20 SI-55 G1/8-IG

Część nr..:10.01.06.03517

https://www.schmalz.com/10.01.06.03517

Części zamienne



SC 080 G1/8-IG

Część nr..:10.01.06.03270

Connection geometry: 080
Vacuum connection: G1/8"-F
Length L1: 32 mm
Fitting length: 17,5 mm
Nominal diameter dn: 8,6 mm



SPB4 20 SI-55 SC080

Część nr..:10.01.06.02588

Size: 20
Suction cup material: Silicone SI
Material hardness [Shore A]: 55 Shore A
Number of folds: 4,5